Prof. Dr. Burkhard Stiller, Universität Zürich, Binzmühlestrasse 14, CH-8050 Zürich
Telefon: +41 44 635 6710, Fax: +41 44 635 6809, stiller@ifi.uzh.ch
Sina Rafati, Telefon: +41 44 635 6702, rafati@ifi.uzh.ch

Exercise Sheet 7

Computer Engineering and Communication Networks

Handout: 15.11.2019
Discussion: 21.11.2019 (start 10:00 a.m.)

1. Multiplexing and Modulation

1.1. Determine whether the following statements are correct or not:

a) Different multiplexing methods (e.g., TDM, and FDM) can be used simultaneously in a transmission medium.

b) Multiplexing is a kind of loss-less compression, as more data is transferred through multiplexing.

c) Circuit switching is mainly used for ring topologies.

1.2. Figure 1 represents three different link encodings of a Data stream. The second row represents the clock in this system. Determine the encoding methods according to the streamed data bits.

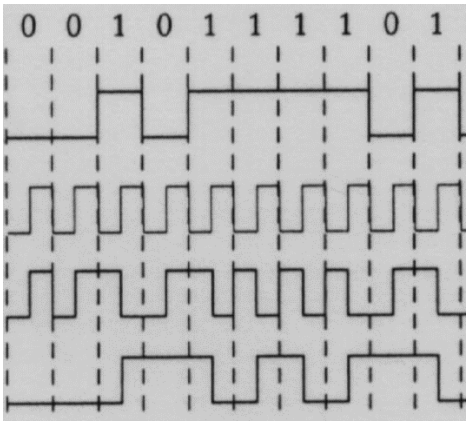

Figure 1

1.3. What is the definition of Baud-rate? Explain it with an example.

1.4. The modem constellation diagram (a) in the slide M08-36 has data points with the following coordinates: (1,1), (1, -1), (-1,1), and (-1, -1). A modem with these parameters, to which data-rate (bps) can reach at 500 baud?

1.5. How much time is required for transmitting 24 bits, if a 64QAM modulation is used with the baud-rate of 4000 B_S?

1.6. If a transmission rate of 1200 bit/s is presented with a computer, and if the 4PSK modulation is used in this computer, what would be the baud-rate (B_S)?

1.7. In which type of modulation, Amplitude and Phase are constant?

a) ASK
b) PSK
c) FSK
d) QAM

1.8. In which choice the baud-rate and bit-rate of the two modulation methods are equal?

a) PSK, ASK
b) ASK, FSK
c) QAM, FSK
d) QAM, PSK

1.9. In figure 2 which modulation is employed?

a) 4PSK
b) 8QAM
c) 16QAM
d) 32QAM

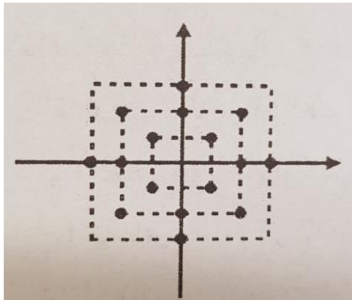

Figure 2

1.10. The diagram shown in Figure 3 represents a modulation method of a modem. How many Amplitudes are used in this modulation?

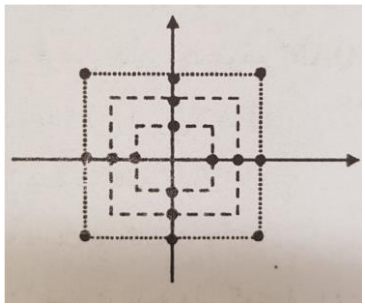

Figure 3