Part 2: High Speed Technologies

- Overview
- Wired Technologies:
  - SDH/SONET and WDM
  - IP Technology
  - Multi-protocol Label Switching (MPLS)
  - Asynchronous Transfer Mode (ATM)
- Access Technologies:
  - Asymmetric Digital Subscriber Loop (ADSL)

High Speed Networks – Overview (1)

- High Speed Local Area Networks (LAN):
  - Fast Ethernet: 100 Mbit/s
  - Gigabit Ethernet: 1 or 10 Gbit/s (expected 40 Gbit/s)
  - HIPPI: 800 Mbit/s
  - Fiber Channel: 100, 200, 400, or 800 Mbit/s
  - High Speed Token Ring: 100 Mbit/s (1 Gbit/s)

- High Speed Metropolitan Area Networks (MAN):

In use today

Discussed in lecture

  - FDDI: 100 Mbit/s
  - FDDI-II: 100 Mbit/s (incl. isochronous channels)
  - DQDB: 34 Mbit/s, 155 Mbit/s, or 622 Mbit/s
  - Metro Ethernet: 10 Gbit/s, 40 Gbit/s, 100 Gbit/s (utilizes layer 1 carrier support)

- High Speed Wide Area Networks (WAN + LAN):
  - ATM-based B-ISDN: *e.g.*, 2, 34, 155, 622, or 2,400 Mbit/s

High Speed Networks – Overview (2)

- Carrier support (physical layer):
  - Plesiochronous Digital Hierarchy (PDH):
    - *e.g.*, DS-0: 0.064 Mbit/s (= 1 voice channel)
    - T-1 (USA): 1.544 Mbit/s (≈ 24 voice channels)
      (also called DS-1)
    - E-1 (Europe): 2.048 Mbit/s
    - E-3 (Europe): 34.368 Mbit/s
    - T-3 (USA): 44.736 Mbit/s
      (also called DS-3)

DS: Digital Signal
T: Telephone Line

Discussed in lecture

In use today

  - **Synchronous Digital Hierarchy (SDH) or Synchronous Optical Network (SONET):**
    - *e.g.*, STS/OC-1: 51.84 MBit/s
    - STS/OC-3: 155.52 MBit/s (≈ STM-1)
    - And way above (see M2 later)

OC: Optical Carrier
STS: Synchronous Transfer Signal Level

High Speed Networks – Overview (3)

- Access/service technologies:
  - Wave Division Multiplexing (WDM)
  - Cable TV
  - Frame Relay (FR)
  - Switched Multi-megabit Data Service (SMDS)
  - xDSL (Digital Subscriber Line)

Discussed in lecture

In use today

- Wireless technologies:
  - GSM
  - Wireless LAN
  - Satellite networks and links
  - …

⇨ *Dedicated lecture on "Mobile Communication Systems" (Typically run in the Spring Term)*

Protocol Layer Architecture – Examples

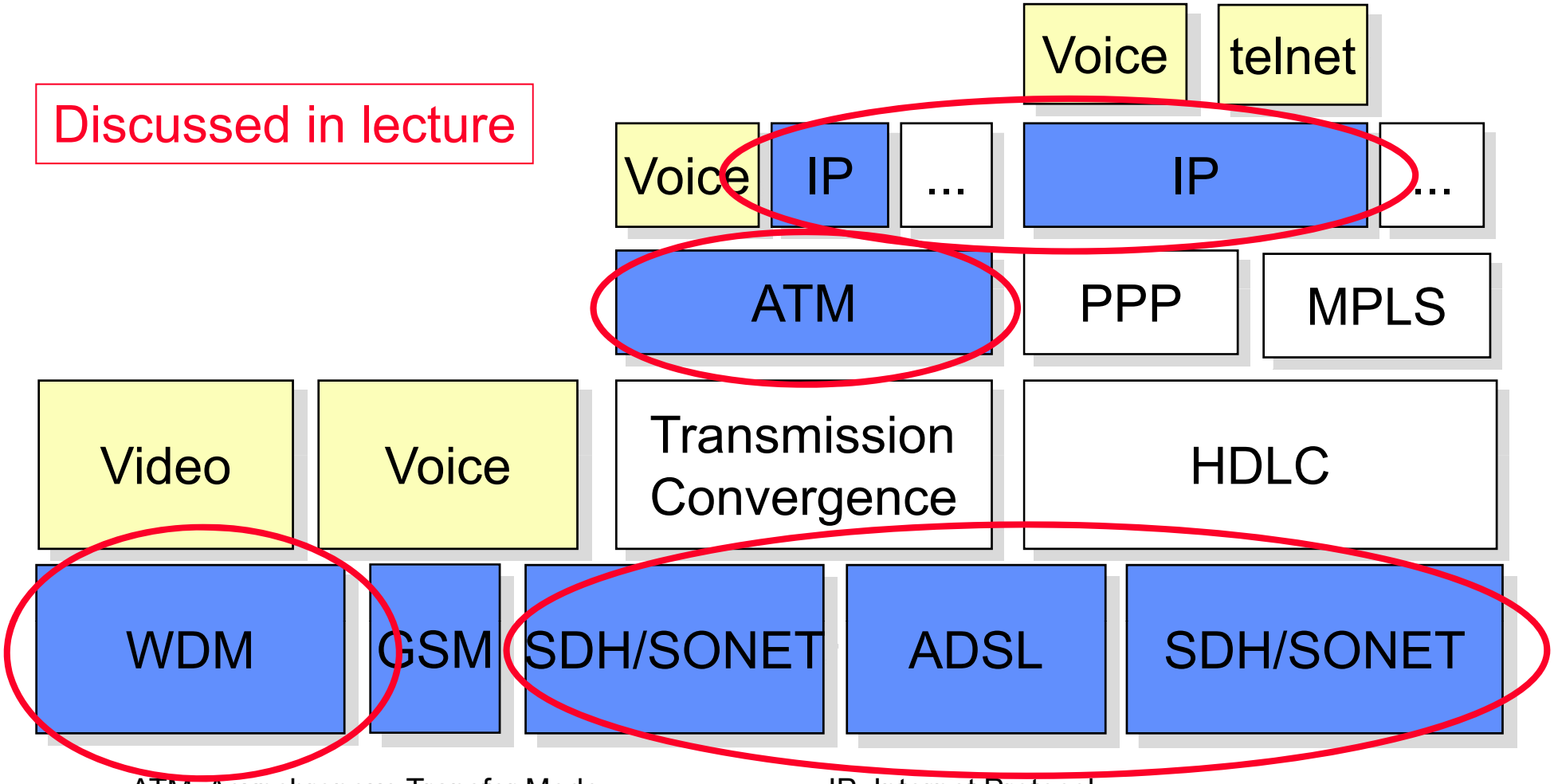

ATM: Asynchronous Transfer Mode
GSM: Global System for Mobile Communication
HDLC: High Data Link Control
IP: Internet Protocol
PPP: Point-to-Point Protocol
WDM: Wavelength Division Multiplexing

Wired Technologies

SDH/SONET and WDM

Wavelengths

- Wavelengths (WL) equal color
  - The higher the frequency, the shorter the WL
  - Short WLs identified by WL, long WLs by frequency
- Human eyes are sensitive to 400 to 700 nanometer
  - Blue/violet to red
  - Because it is the brightest output of the human's local star

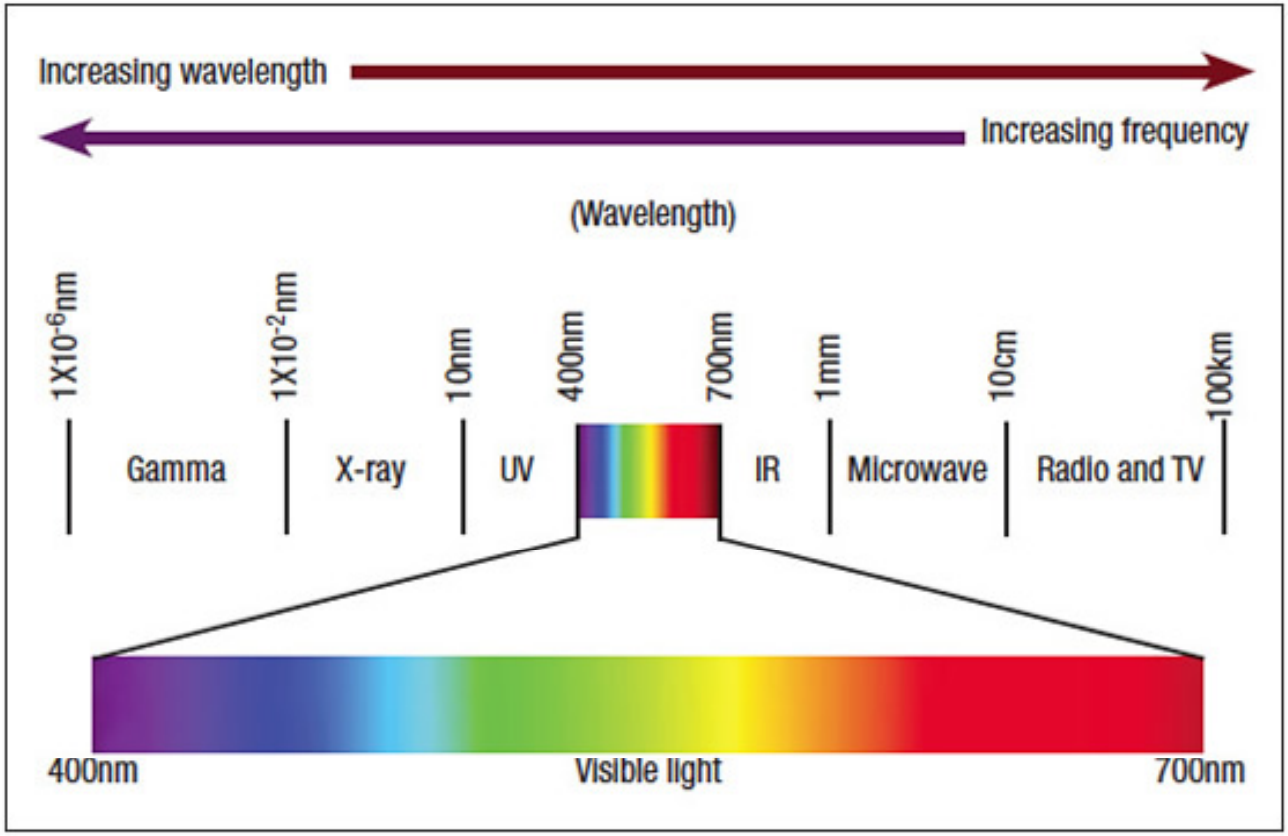

http://www.micromanufacturing.com/sites/default/files/stories/import/1306-LaserPoints-web-resources/image/laser-wavelength-chart_opt.jpeg

Infrared Used for Transmission

- Because of low attenuation
  - *I.e*, absorption (by water atoms) and scattering (light bouncing of atoms)
- Wavelengths chosen between absorption bands
- The lower the wavelength, the lower the scattering
  - That's why the sky is blue (blue longest visible wavelength, i.e., highest scattering)
  - Why not use even higher wavelength for less scattering?
    - Because higher wavelengths transition to heat, which causes background noise

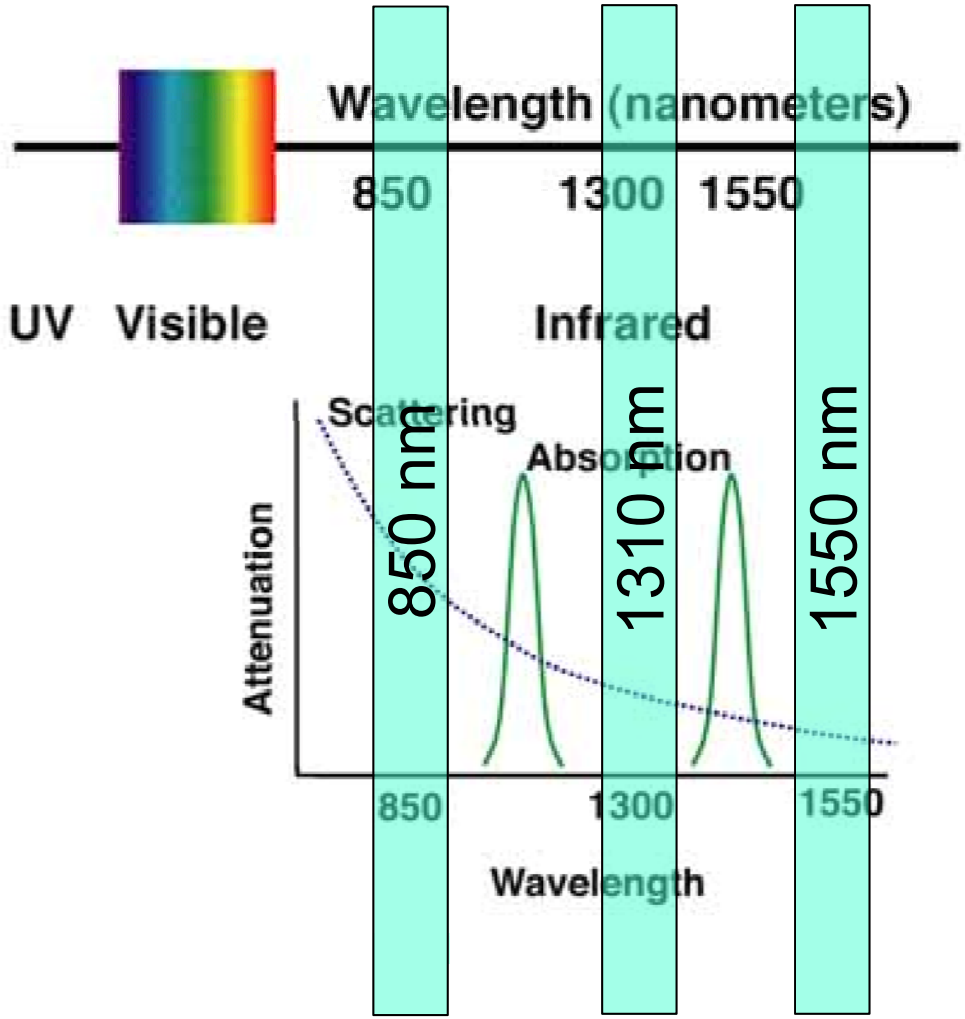

http://www.thefoa.org/tech/wavelength.htm

Synchronous Digital Hierarchy – SDH/SONET

- SONET: Synchronous Optical Network.
- ANSI-SONET (U.S.A.) and ETSI-SONET (Europe).
- SDH: Synchronous Digital Hierarchy (international):
  - Synchronous frames: 125 μs
  - Integration of ATM- and STM-based data.
  - Compatibility with existing equipment and signaling.
  - Support of various transmission rates.

(OC ≈ STS)

STS-x: Synchronous Transfer Signal level x
STM-y: Synchronous Transfer Module level y

SONET	SDH	Transmission Rate in Mbit/s	User Data Rate in Mbit/s
STS-1		51.84	50.120
STS-3	STM-1	155.52	150.336
STS-9	STM-3	466.56	451.008
STS-12	STM-4	622.08	601.344
STS-24	STM-8	1244.16	1202.688
STS-36	STM-12	1866.24	1804.032
STS-48	STM-16	2488.32	2405.376
STS-192	STM-64	9953.28	9621.504
STS-768	STM-512	39813.12	38486.000
STS-3072	STM-1024	159252.48	153944.000

Practical Use of SDH/SONET

- Possible break-down of STM-1/OC-3 circuit (example):

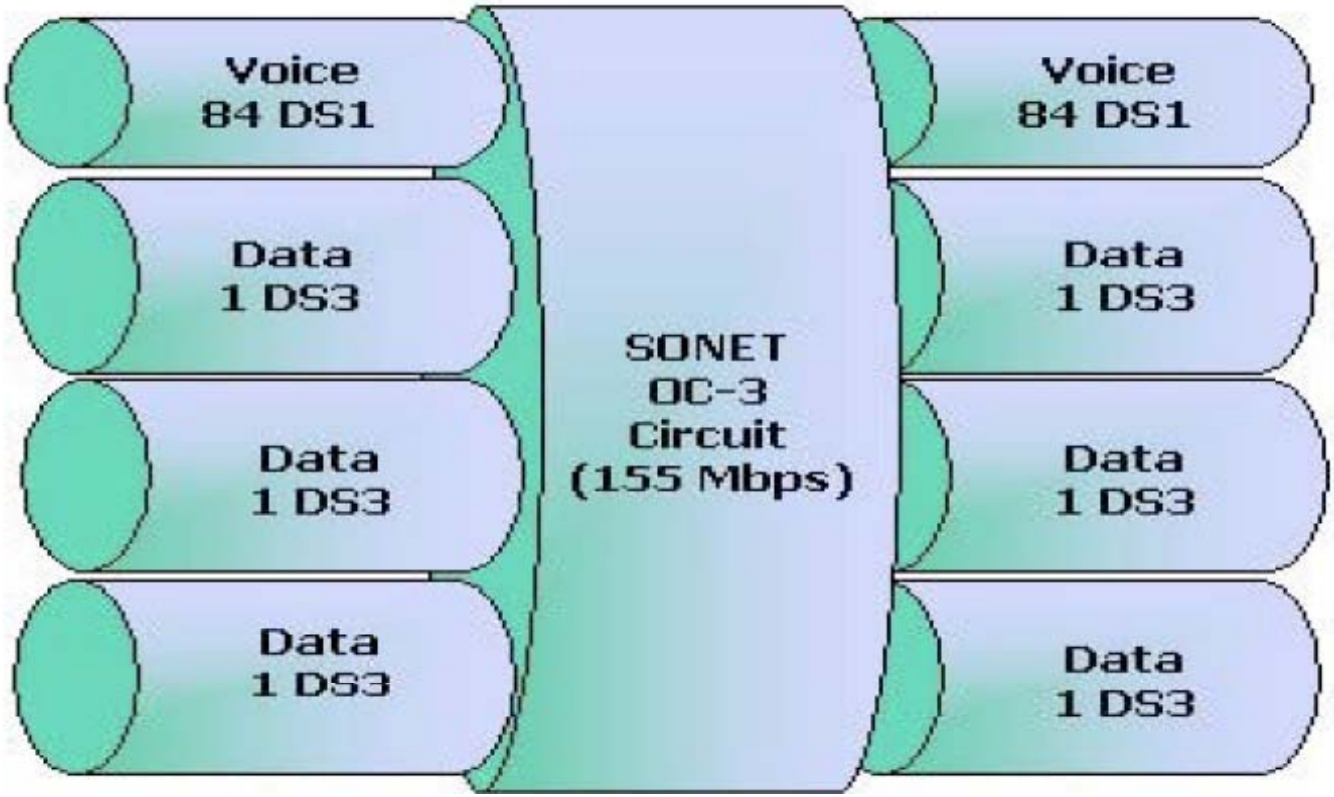

- High availability of high-speed connectivity and very good resiliency due to network outages

10 Gigabit Ethernet Alliance

SONET – Protocol Architecture

- Hierarchical levels:
  - Photonic level: Type of fiber optics, electronic/optical converter, transmission of bits.
  - Section level: Generation of SONET frames.
  - Line level: Synchronization of frames, multiplexing.
  - Path level: End-to-end transport of data.

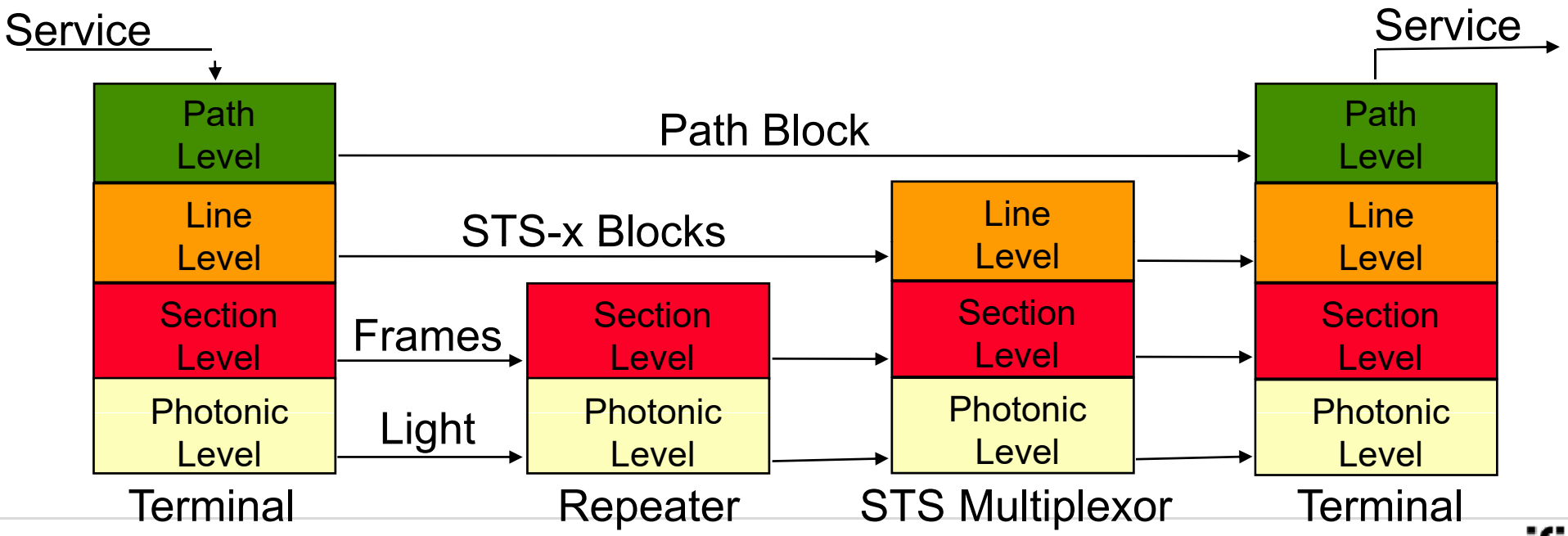

SONET – Architecture

- Section: Fiber-optical cable between sender/receiver.
- Line: Sequence of sections.
  - Unchanged internal signal and channel structure.
- Path: Interconnection of two devices.

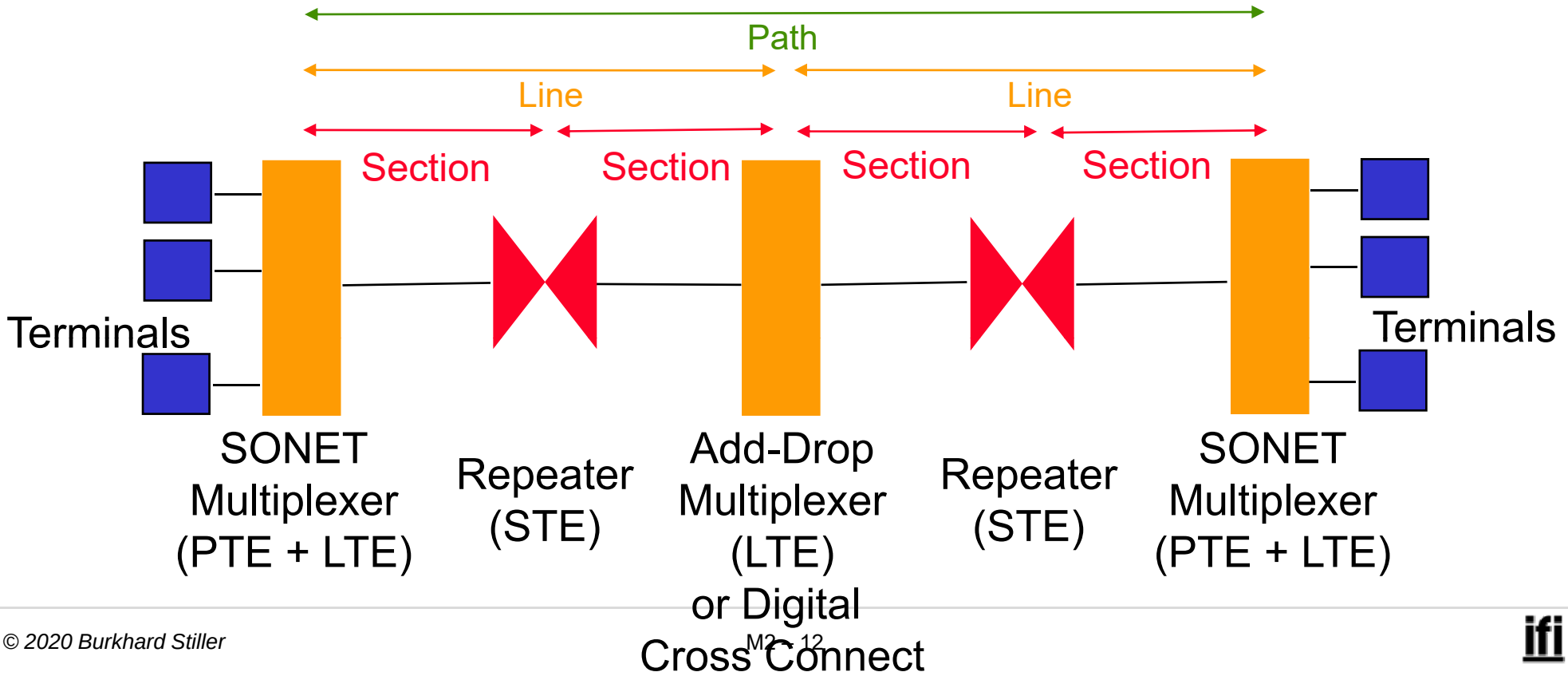

Repeater Layer

- Repeater section layer is the lowest level of link components in an SDH network
  - Deals with the transport of an STM-N frame across the physical medium
  - Point-to-point connection between two repeater section termination points with direct optical or electrical domain connectivity
  - The repeater section is mainly designed to overcome physical limitations of the transport technology

Multiplexer Layer

- One or more consecutive repeater sections might compose a multiplex section
  - Main element to build different topologies (e.g., ring, star, double ring)
  - Deals with the transport of path layer payloads across the physical medium

- Multiplex section is a point-to-point logical link that connects to Add-Drop Multiplexer (ADM), Multiplexer (MUX), or Digital Cross Connect System (DCC) devices
  - These devices might not include a path termination

- Overhead is interpreted and modified by SONET/SDH Multiplexer (or Multiplex Section Terminating Equipment, MSTE)
  - Multiplex section (MS) overhead is accessed only after the section overhead has been first terminated

Path Layer

- One or more connected multiplex sections may provide a transport service for a path
  - Multiplex section may carry multiple paths by multiplexing
  - Deals with the transport of various payloads between SONET/SDH terminal multiplexing equipment

- Path layer maps payloads into the format required by the Multiplex Section Layer
- Communicates end-to-end via the Path Overhead (POH)
- POH is terminated and modified by Path Terminating Equipment (PTE), terminals in short
  - Regenerator and multiplex section overhead must be terminated to access the overhead

SONET/SDH Network Elements

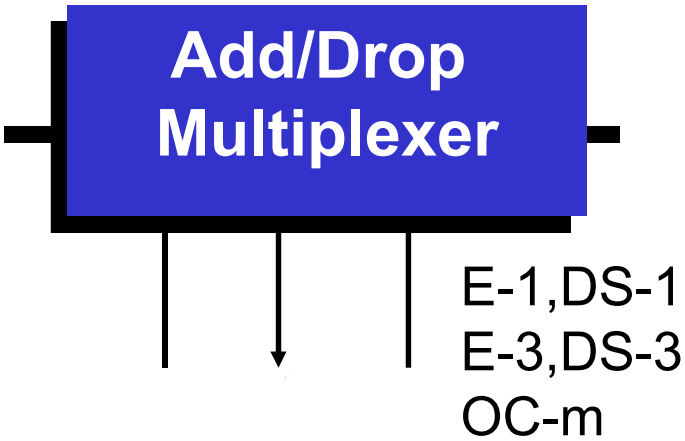

Used at Intermediate or Terminal Sites

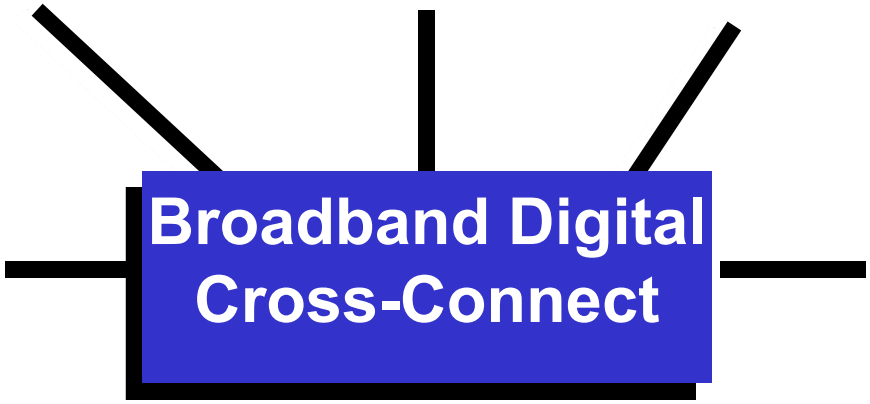

Switching at STS Level

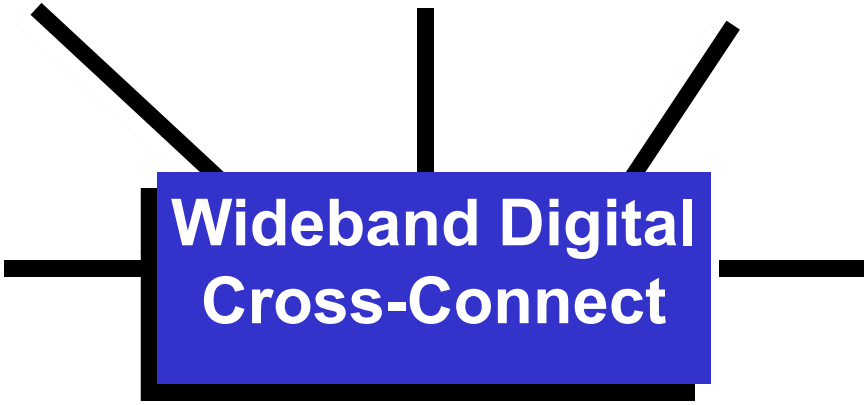

Switching at sub-STS Level
(Terminates SDH signals)

SDH Network Topologies (1)

- SDH topologies are designed for providing a flexible and reliable transport for required paths
- Main issues:
  - Capacity planning, bandwidth provisioning
  - Redundancy, automatic fail-over
  - Delay and jitter control
- Typical topologies:
  - Point-to-point links (with protection) and DCS/MUX
    - Arbitrary complex topology may be built

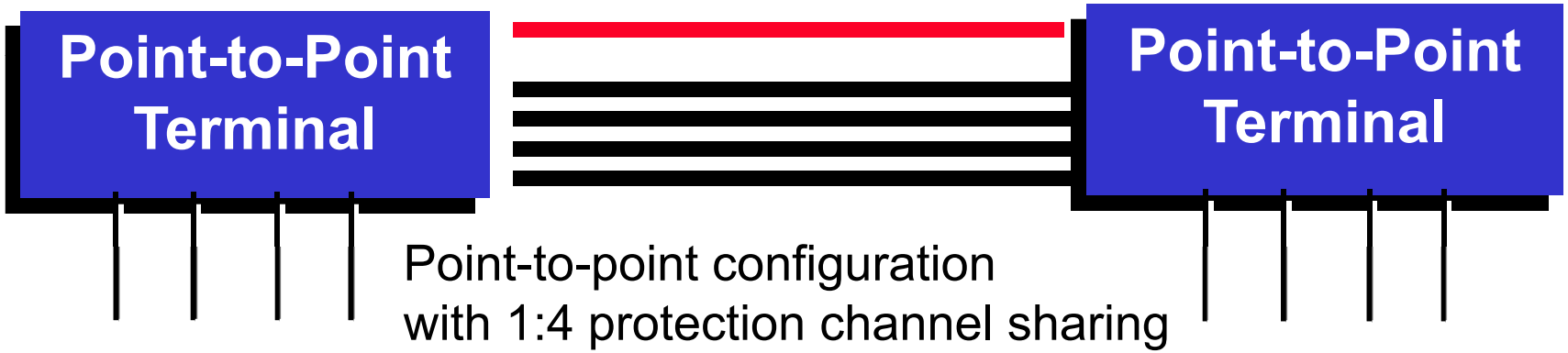

SDH Network Topologies (2)

- Typical topologies (cont'd):
  - Rings (only working traffic is shown)
  - Sub-network (path) or multiplex section switching for protection

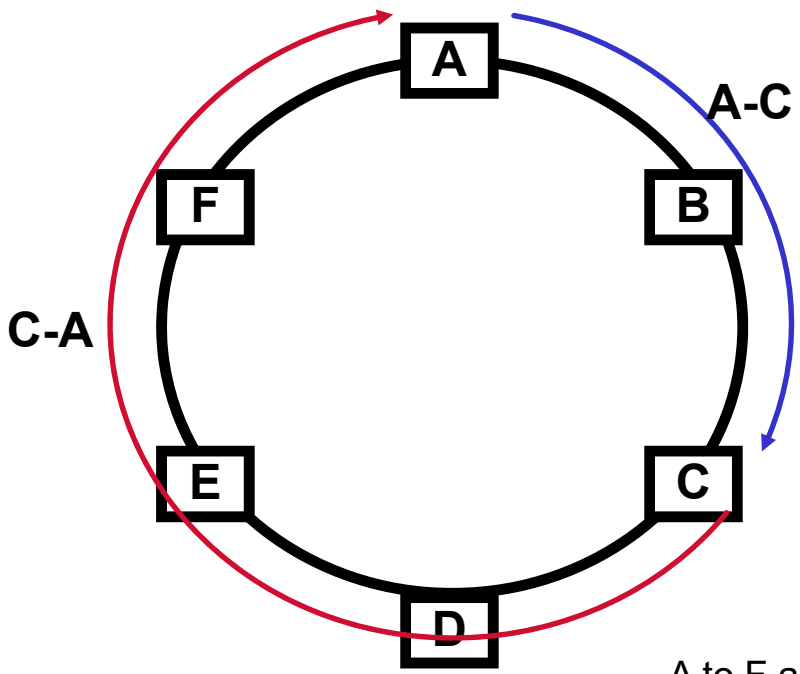

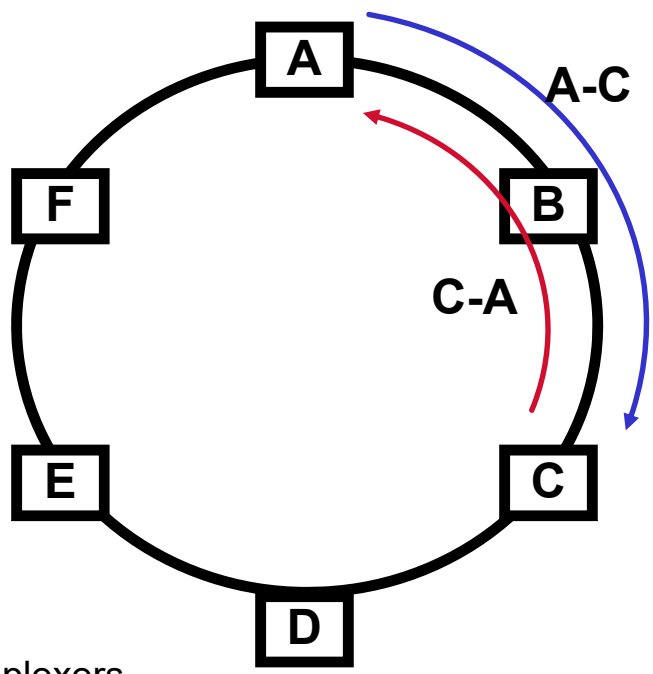

A to F are Add-Drop Multiplexers

Uni-directional Ring
(1 fiber)

Bi-directional Ring
(2 fibers)

SDH Network Topologies (3)

- Typical topologies (cont'd):
  - Interconnected protected rings with ADM/DCS
    - Minimum resource usage (physical media) for avoiding single point of failures
    - Created by add-drop provisioning
      - A path is built up by specifying hop-by-hop channels
      - (a) added to a ring and (b) dropped from the ring
    - Add-drop provisioning is typically done by network management system
    - There is no signaling protocol

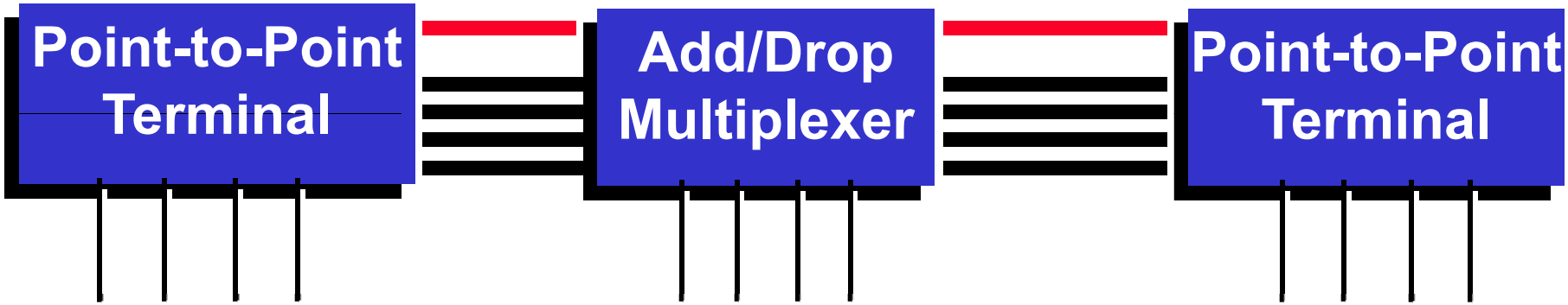

Linear Add/Drop Route

Electrical and Optical Signals, Frames

- Signals
  - STM-<N> is electrical, STM-<N>O is optical
  - STM-<N>c means concatenated
    - Not multiplexed signal
    - Originates at that speed
    - Administrative overhead optimized compared to real multiplexed signal
  - Frame format is independent of electrical or optical signals

- Frames
  - Fixed 125 μs frame time length
    - To support 8 kHz sampled voice applications
  - Bytes organized into rows and columns
    - Administrative channels are rate decoupled for easier processing

SONET – Frame (STS-1)

- Transmission from left to right by rows.
- Frames contain user data and additional control data as well as timing information.

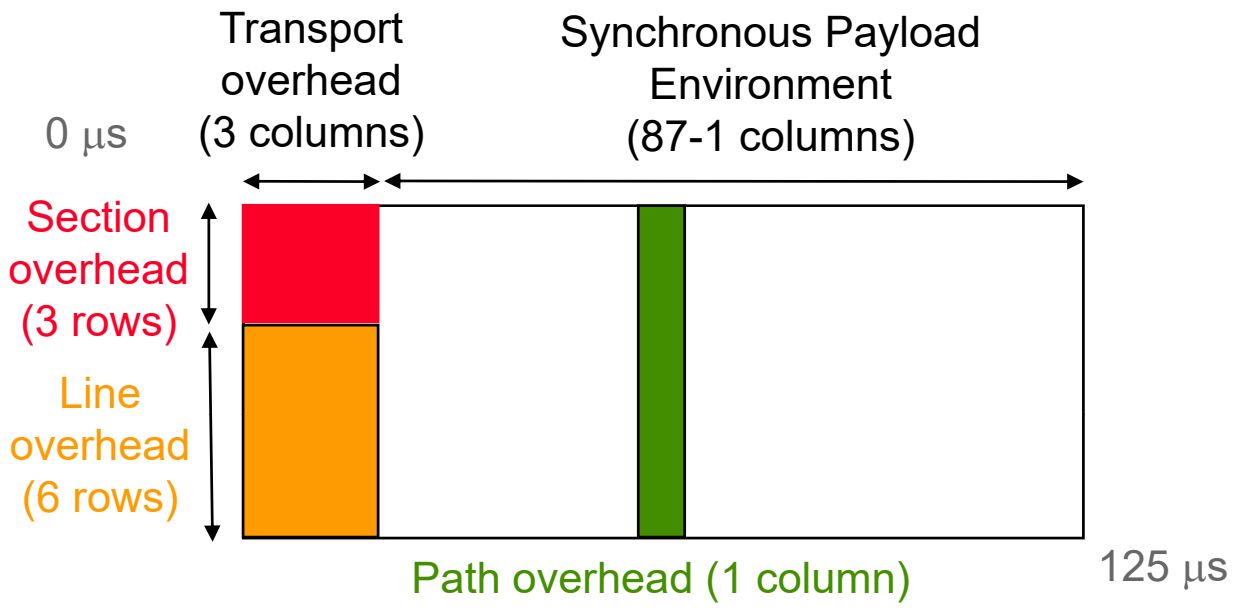

STS - Frame:
(3+6) * (3+87) Octet
⇨ 810 Octet

Gross data:
810 Octet / 125 µs
⇨51,84 Mbit/s

User data:
810 - [3*(3+6) + 1*(3+6)] Octet
⇨ 49,536 Mbit/s

SONET – Frame (STS-N)

- Basic frame: STS-1 with 810 octets.

- Higher rate SONET channels formed by octet-interleaving multiple STS-1 inputs:
  - STS-N rate is formed from N STS-1 inputs.
  - Advantage: STS-1 line cards remain operable in an STS-1-to-STS-N multiplexer.
  - STS-N frame: 90 * N columns per row, including 4 * N columns of interface overhead.
  - Example: STS-3 = STM-1 (155.52 Mbit/s)

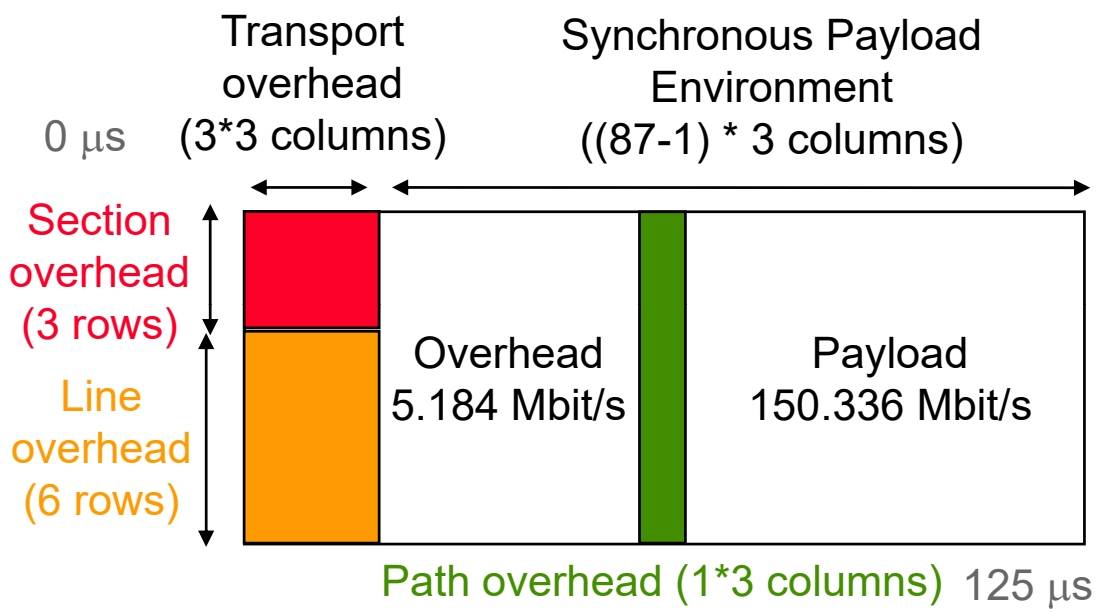

Frame Structures for Common Hierarchies

STM-1

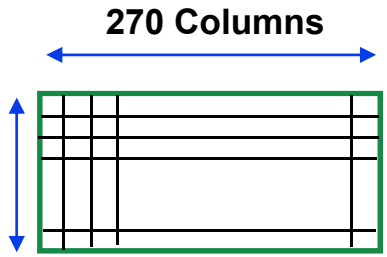

155.52 Mbit/s

STM-4

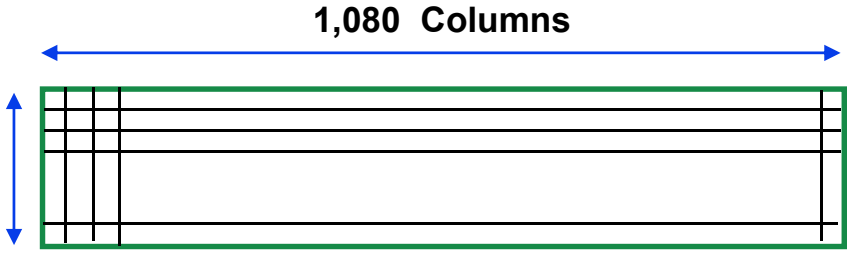

622.08 Mbit/s

STM-16

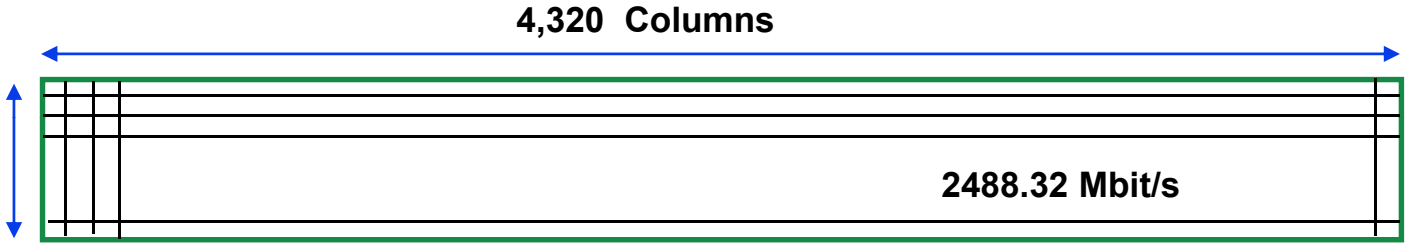

STM-64 9 rows x 17280 columns, 9953.28 Mbit/s

SONET – Section and Line Overhead

A1	A2	C1
B1	E1	F1
D1	D2	D3
H1	H2	H3
B2	K1	K2
D4	D5	D6
D7	D8	D9
D10	D11	D12
Z1	Z2	E2

– Section Overhead
  - A1/A2 Preamble 1111 0110 0010 1000
  - C1 Multiplexed STS-1 frames (binary coded)
  - B1 Detection of errors for previous frames
  - E1 64 kbit/s voice channel (maintenance)
  - F1 64 kbit/s voice channel
  - D1 - D3 192 kbit/s data communications (maintenance)

– Line Overhead
  - H1 - H3 Pointer for payload
  - B2 Parity for STS-1 frame
  - K1/K2 Signaling channel between multiplexers
  - D4 - D12 576 kbit/s data channel
  - Z1 - Z2 reserved
  - E2 64 kbit/s voice channel

SONET – Path Overhead

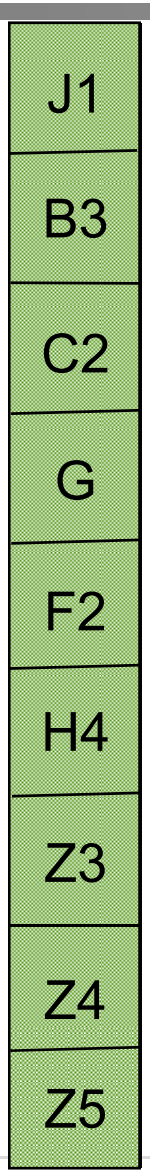

- Path Overhead
  - J1 64 kbit/s channel
    64 Byte messages periodically (correctness)
  - B3 Parity (payload, STS-3 frame)
  - C2 Structure and contents of STS payload
    13H ATM cells
    14H DQDB-data
  - G Backwards channel
  - F2 64 kbit/s channel
  - H4 Dependent on C2
  - Z3-Z5 Reserved

© 2020 Burkhard Stiller

SDH/SONET Payloads (1)

- Two main types of payloads:
  - Multiplexed voice channels originated in PDH-based devices
  - Transparent bit stream services
    - May be used for data packet transport or ATM
- Payloads are organized into paths over the network
  - Different path types based on the content: STM path, High-order (HO) path (carries E3/E4), or Low-order (LO) path (carries E1/E2)
- Payloads are managed by using section and path overhead
  - Payloads are put into a so-called payload or VC (virtual container) capacity
    - Frames provide a higher bit rate than the payload
    - Required to be able to compensate for frequency differences
  - Payloads may arrive with very different phases
    - Varying line delays cannot be avoided in a WAN with long distances
    - Light needs some time to reach from the transmitter to the receiver that is much bigger than the bit timing interval or the frame cycle time

SDH/SONET Payloads (2)

- Mapping hierarchy

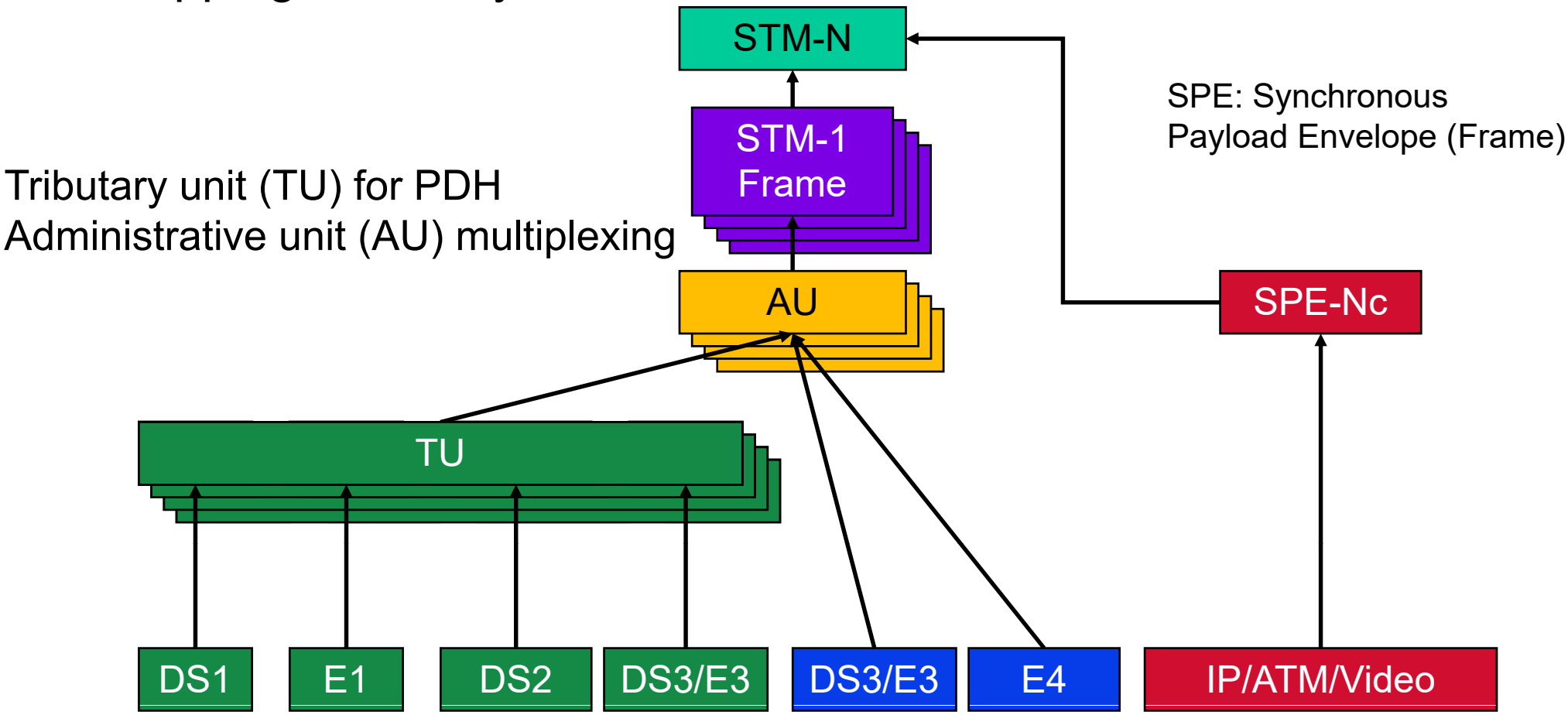

SONET/SDH – Localization of Payload (1)

- Pointers were included into SONET/SDH frame design to provide tools to compensate for incoming payload phase differences
  - Without extensive buffering
  - So not too much delay and jitter

- Pointers solve the question of localizing payload within a frame

- Advantage over PDH network where this problem was solved by asynchronous multiplexing and a lot of bad consequences
  - Pointers make it possible to create ring topologies (efficient fail-over redundancy) for SDH

SONET/SDH – Localization of Payload (2)

- Pointers H1-H3 contain values for number of payload bytes in-between H3 and J1.
  - ⇨ Direct access to single channels.
  - ⇨ No multiplexing necessary.

Payload may be located in two STS-1 frames!

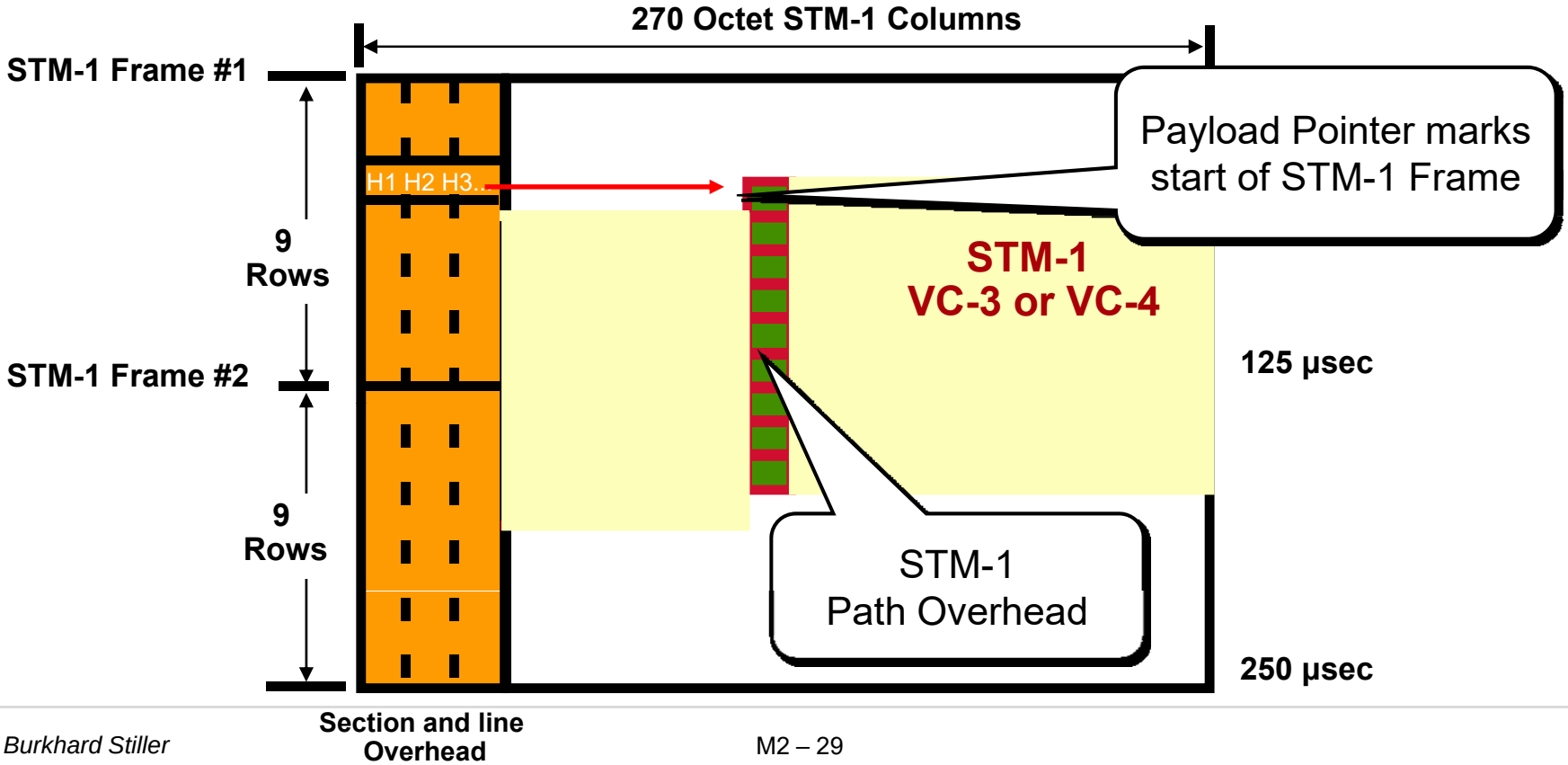

SONET/SDH – Localization of Payload (3)

- Example of formatting ATM cells in STM-1/OC-3 frames:
  - Conventional SONET framing.
  - Cells are byte-aligned, but are not restricted to be mapped into contiguous bytes.

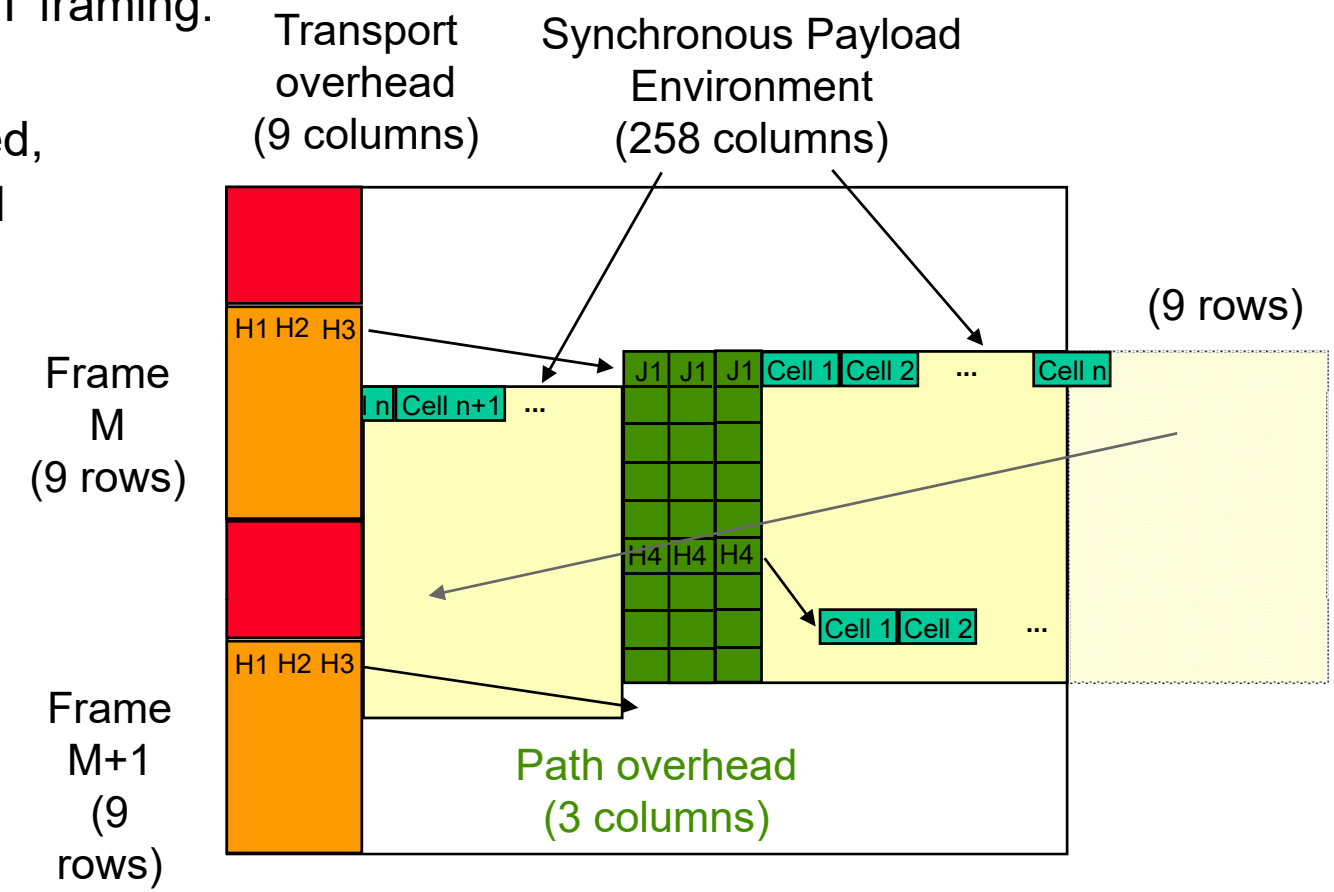

Fiber Optic Networks Revisited

Traditional use of fibers:

- Current transmission capacities (products):
  - 2.5 Gbit/s (OC-48)
  - 10 Gbit/s (OC-192)
  - 40 Gbit/s (OC-768)
  - And in labs (2011): 26 TBit/s over 50 km cable (no errors)
- Lasers available for 850 nm, 1310 nm, and 1550 nm wavelength.

Wavelength-Division Multiplexing

Dense* Wavelength-Division Multiplexing (DWDM)

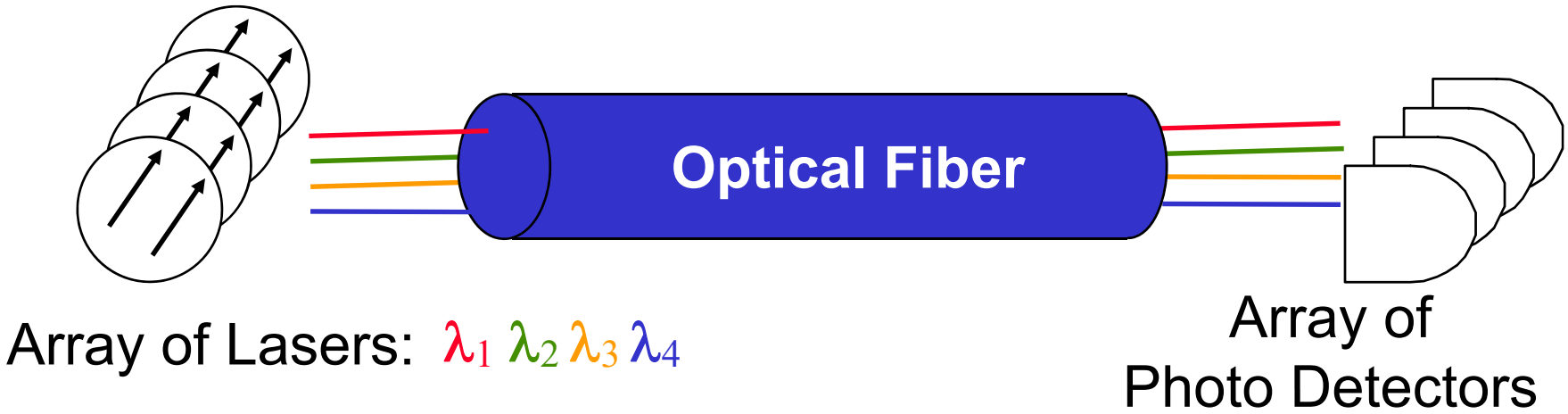

- Current available transmission capacities:
  - 96 lasers at 2.5 Gbit/s = 240 Gbit/s (OC-4608)
  - 32 lasers at 10 Gbit/s = 320 Gbit/s (OC-6144)
  - Soon 128 lasers at 10 Gbit/s > 1 Tbit/s (= 1.000.000.000.000 bits/s)

* “Dense” WDM: More than 10 lasers used simultaneously. Today: WDM usually means dense WDM.

Protocol Transparency of WDM

- Wavelengths (λs) do not interfere.
- Each λ_i can carry a different protocol at up to 10Gbit/s: Massive Capacity Expansion of installed fibers!

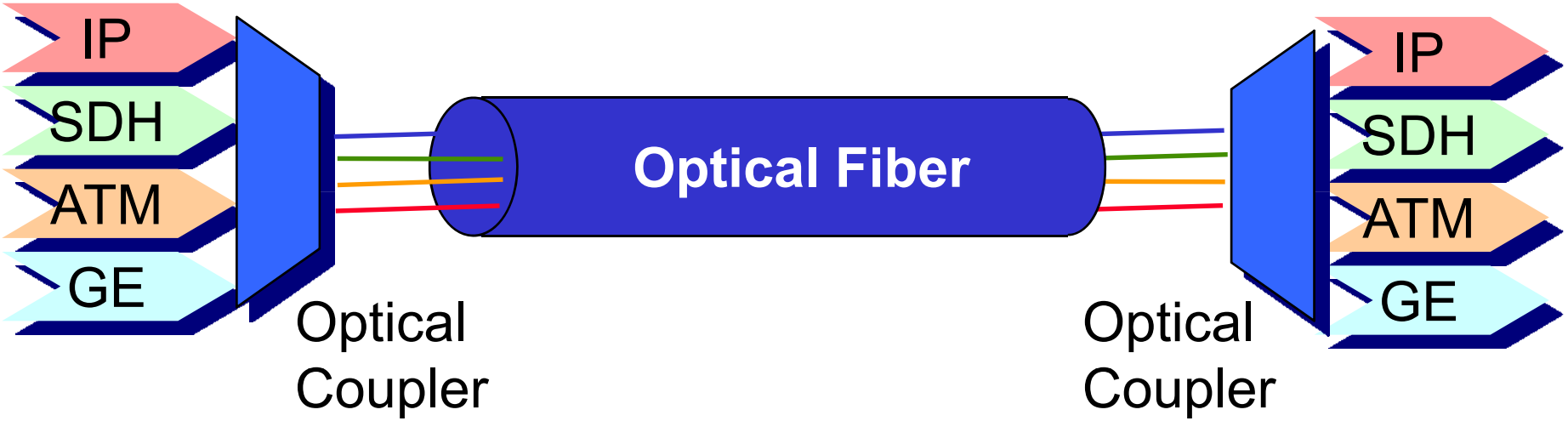

GE: Gigabit Ethernet

Real-life Examples: http://www.convergedigest.com/search/label/Submarine%20Cable

Fixed WDM Multi-point Network

- Optical Add/Drop Multiplexer selectively extracts λ_is from the fiber using a static configuration.

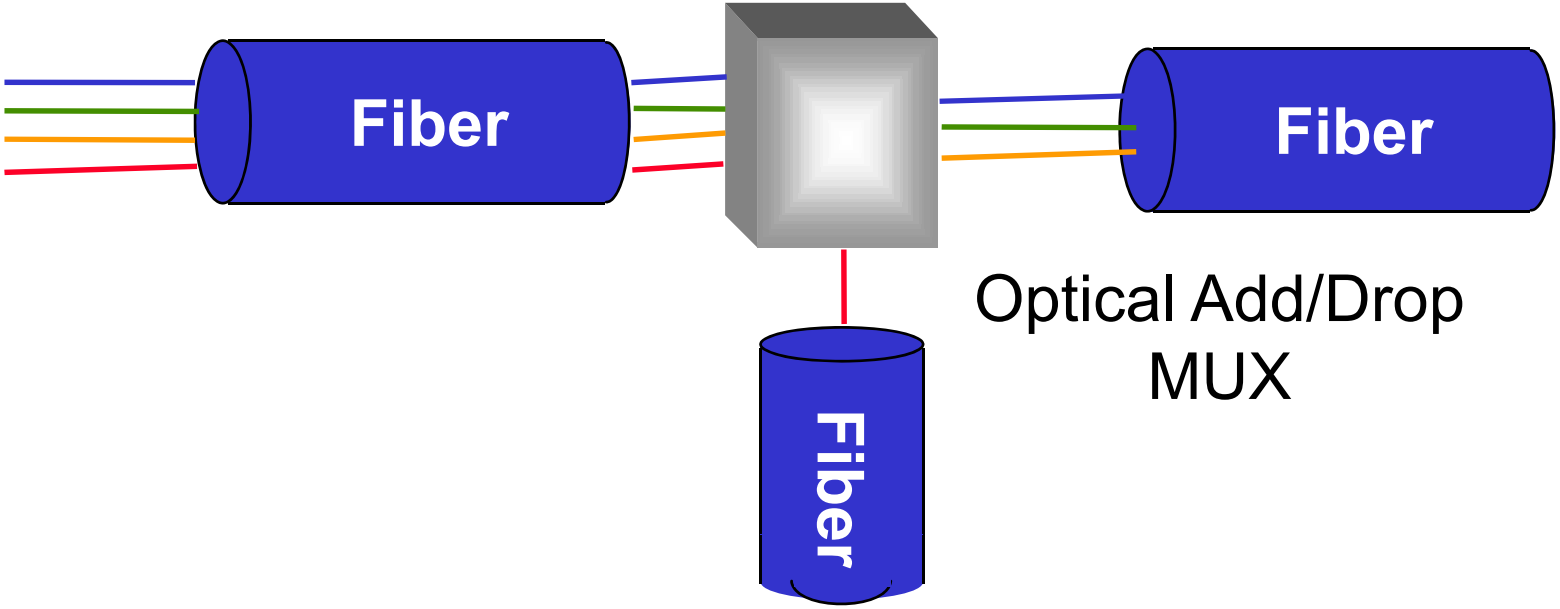

- Allows to build a virtual topology for each λ_i on top of a physical network.

Re-configurable WDM Multi-point Network

- Optical switches and cross-connects allow for a dynamic reconfiguration of virtual topologies.

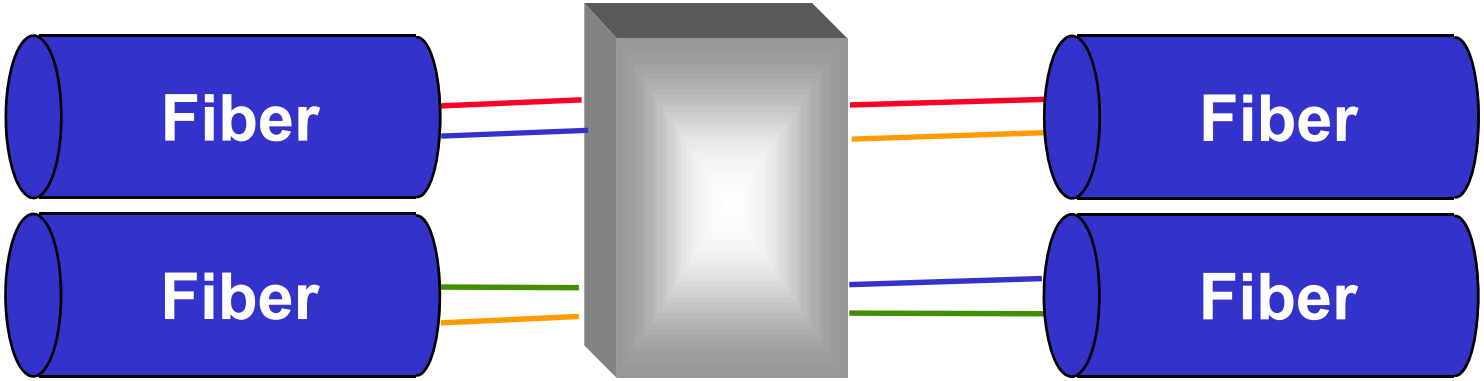

Optical XC

- Optical switching today is too slow to be used for data switching.

Wired Technologies

IP Technology

The Internet World

- Internet Service Provider (ISP):
  - Access provider vs. service provider vs. content provider
    - Roles and relationships
    - Peering and exchanges
  - IP basic and advanced technology:
    - Service Models:
      - Best-effort
      - Integrated Services (IntServ)
      - Differentiated Services (DiffServ)

- Internet User:
  - Residential user
  - Commercial user
    - Small and medium-sized enterprise
    - National enterprises
    - International enterprises

ISPs Roles and Relationships (1)

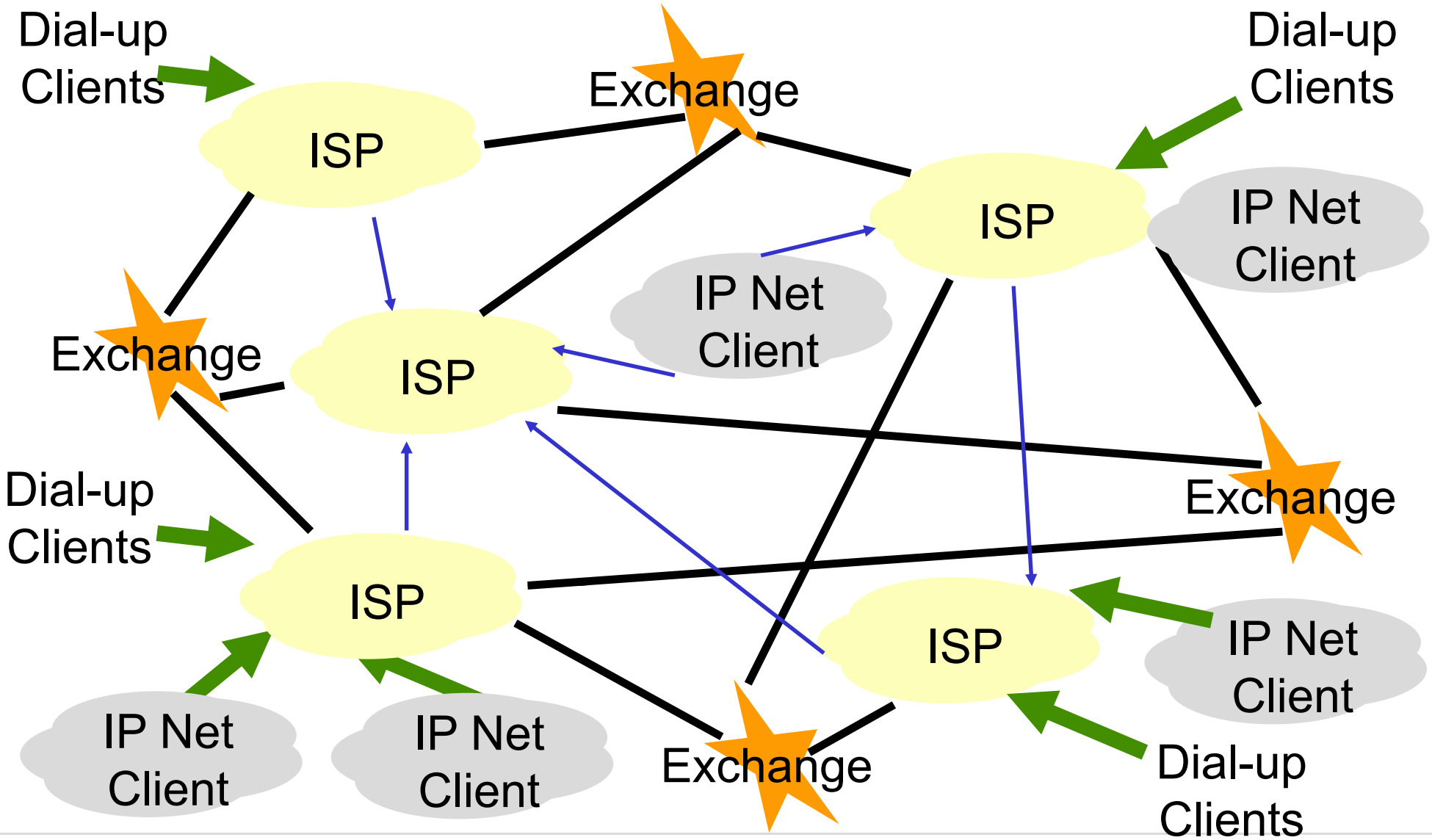

ISP Roles and Relationships (2)

- Peering
- Retail Service: Client-Provider
- Wholesale Service: Client-Provider

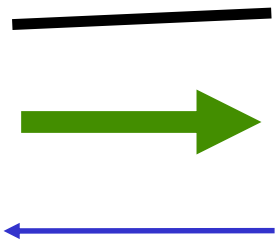

- Internet Service Provider (ISP)
  - Access
  - Transit
- Peers and clients
  - Regulatory environment: licensed providers
- Commercial Internet eXchange (CIX) or Internet Exchange Point (IXP) or Exchange
  - Industrial/commercial body for peering/transit capabilities.

Interconnection Architectures

- Closer is cheaper: Electromagnetic power varies in accordance with the distance.
- Closer is faster: Close distances between sender and receiver minimizes the delay.
- Closer is more efficient: Faster protocol operation.
- Implication: Localization of data traffic.
  - Distinct and measurable advantages, physically short.

- Considerations of locality:
  - The exchange model and
  - Network Acces Points (NAP).

A Hierarchical Internet Structure (1)

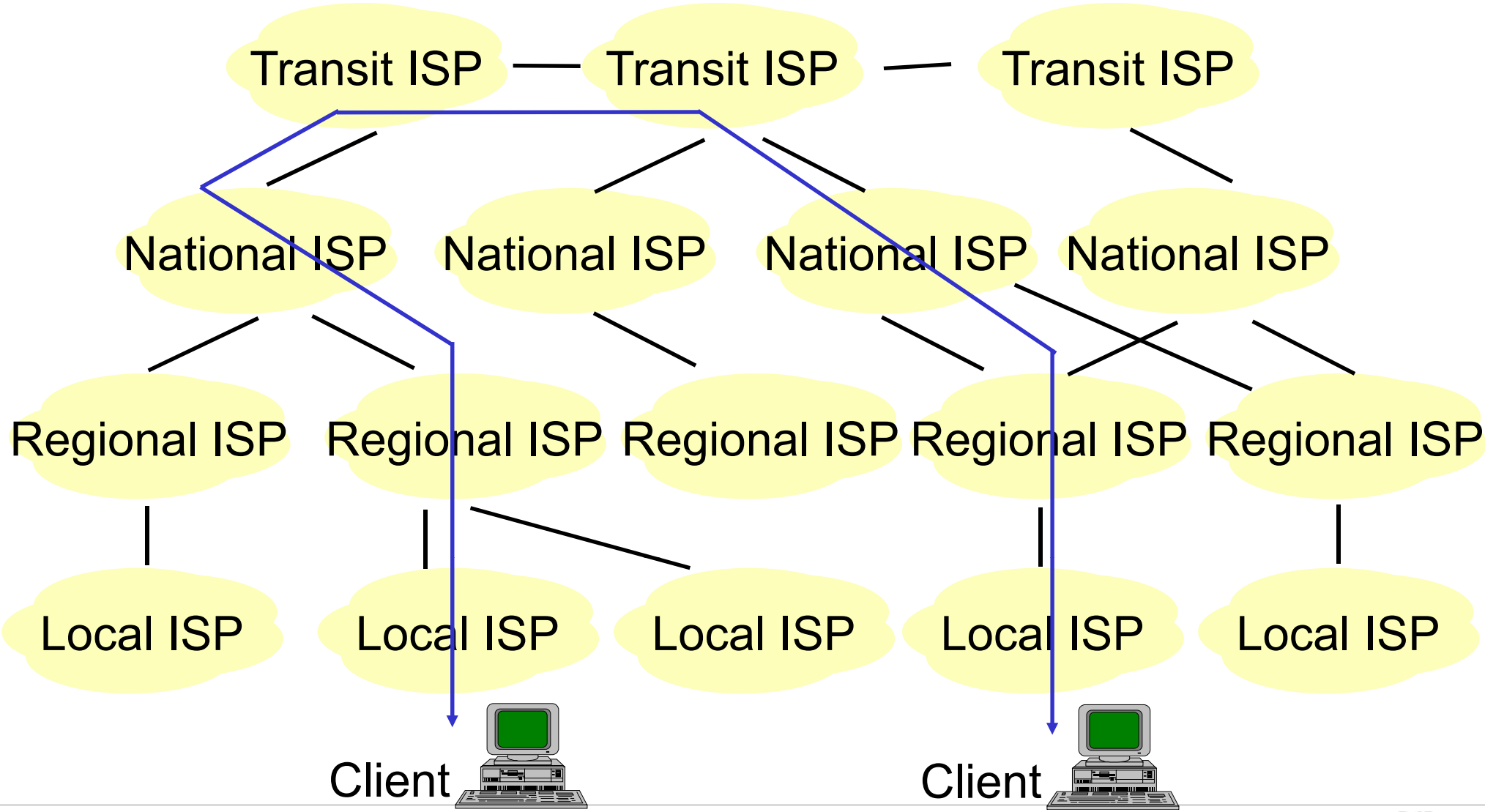

A Hierarchical Internet Structure (2)

- Tiered architecture with
  recursive client-provider relationships.
- Costly, extended paths.
- Pressure for two national ISPs operating in the same market environment.

- Implication: Peering agreements!
  - Includes two types of circuits:
    - Interconnection circuits and
    - Routing circuits.

Example – Regional ISP: Switch 2001

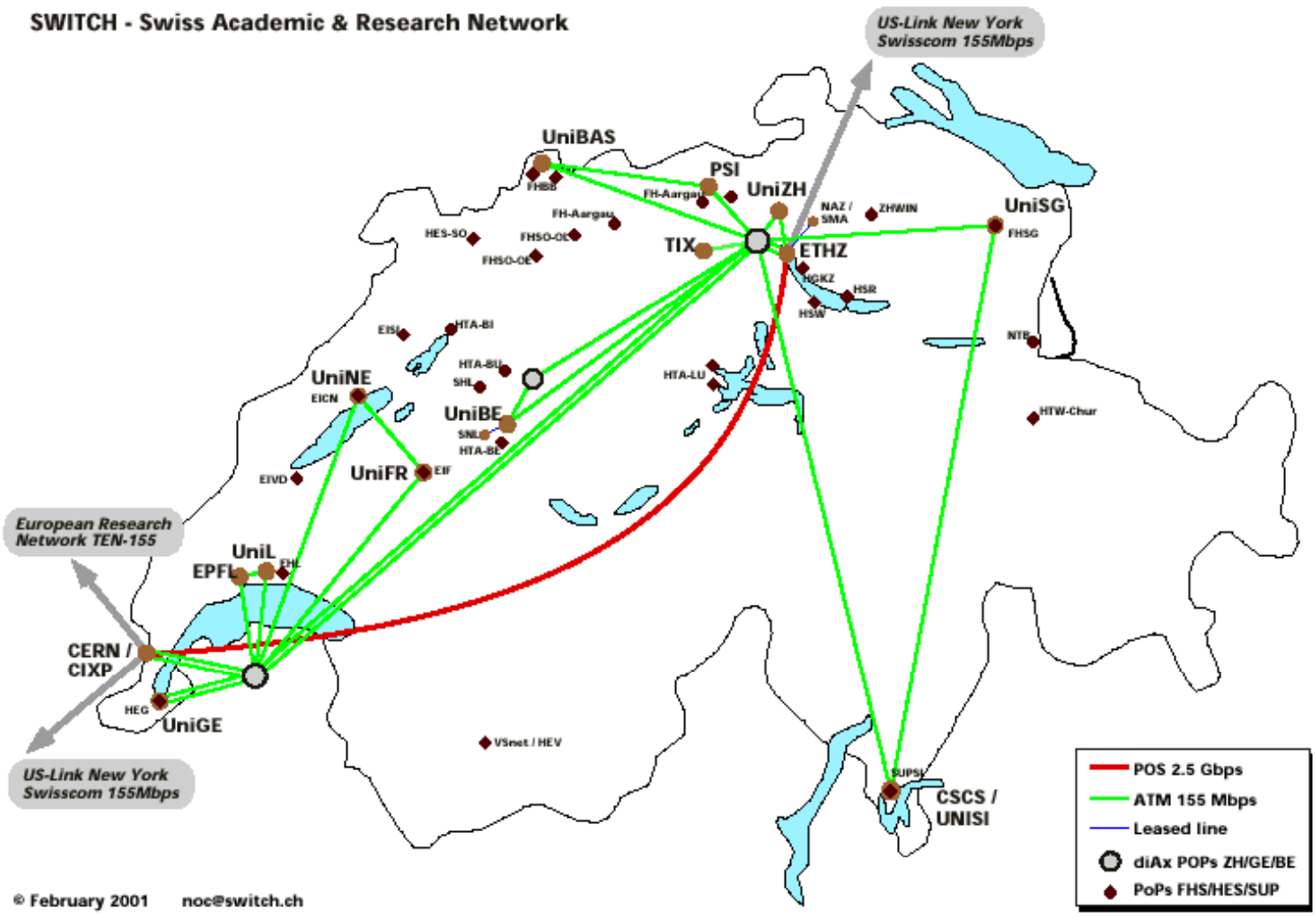

http://www.switch.ch

Example – Regional ISP: Switch 2006

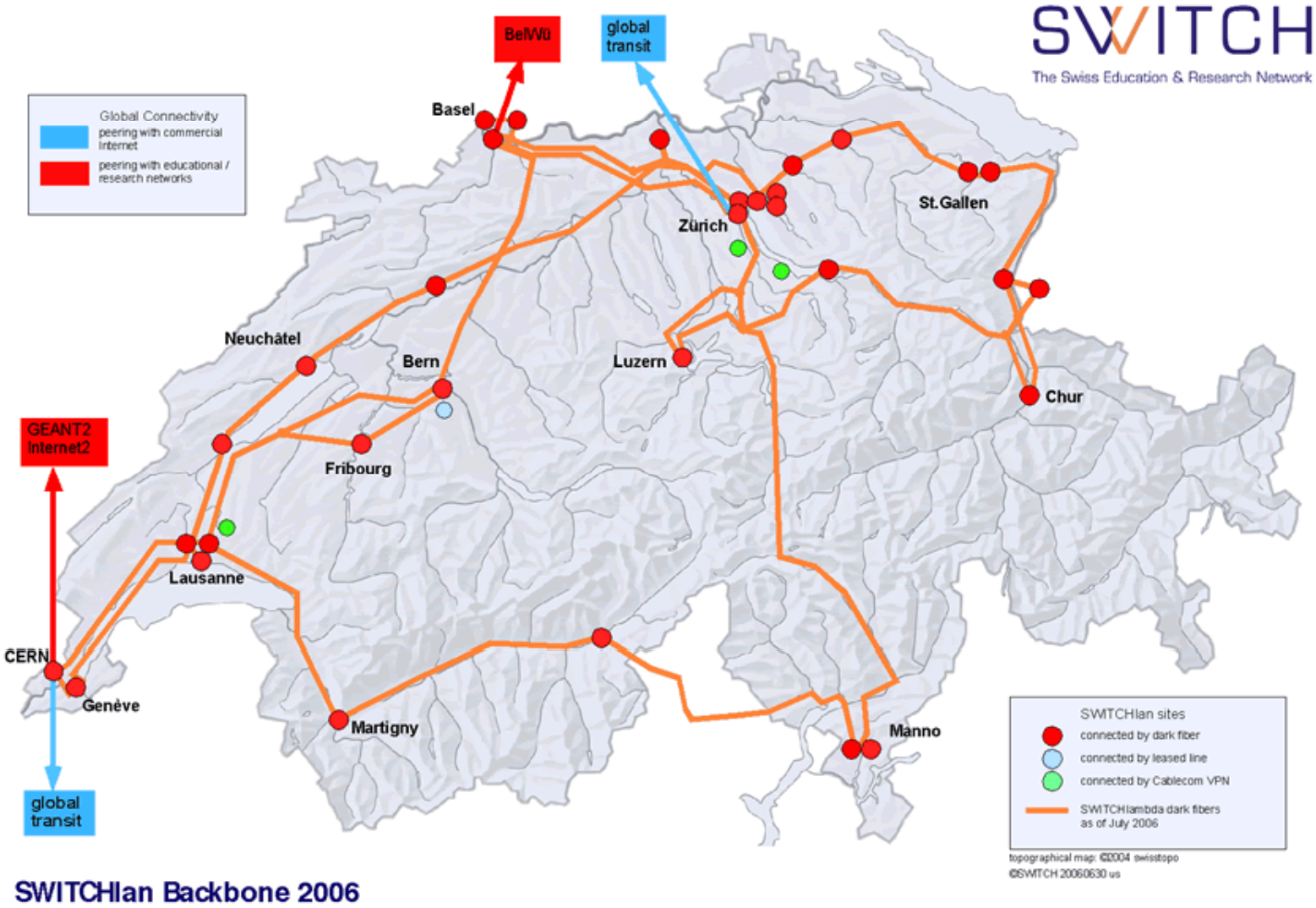

SWITCHlan Backbone 2006

Example – Regional ISP: Switch 2010

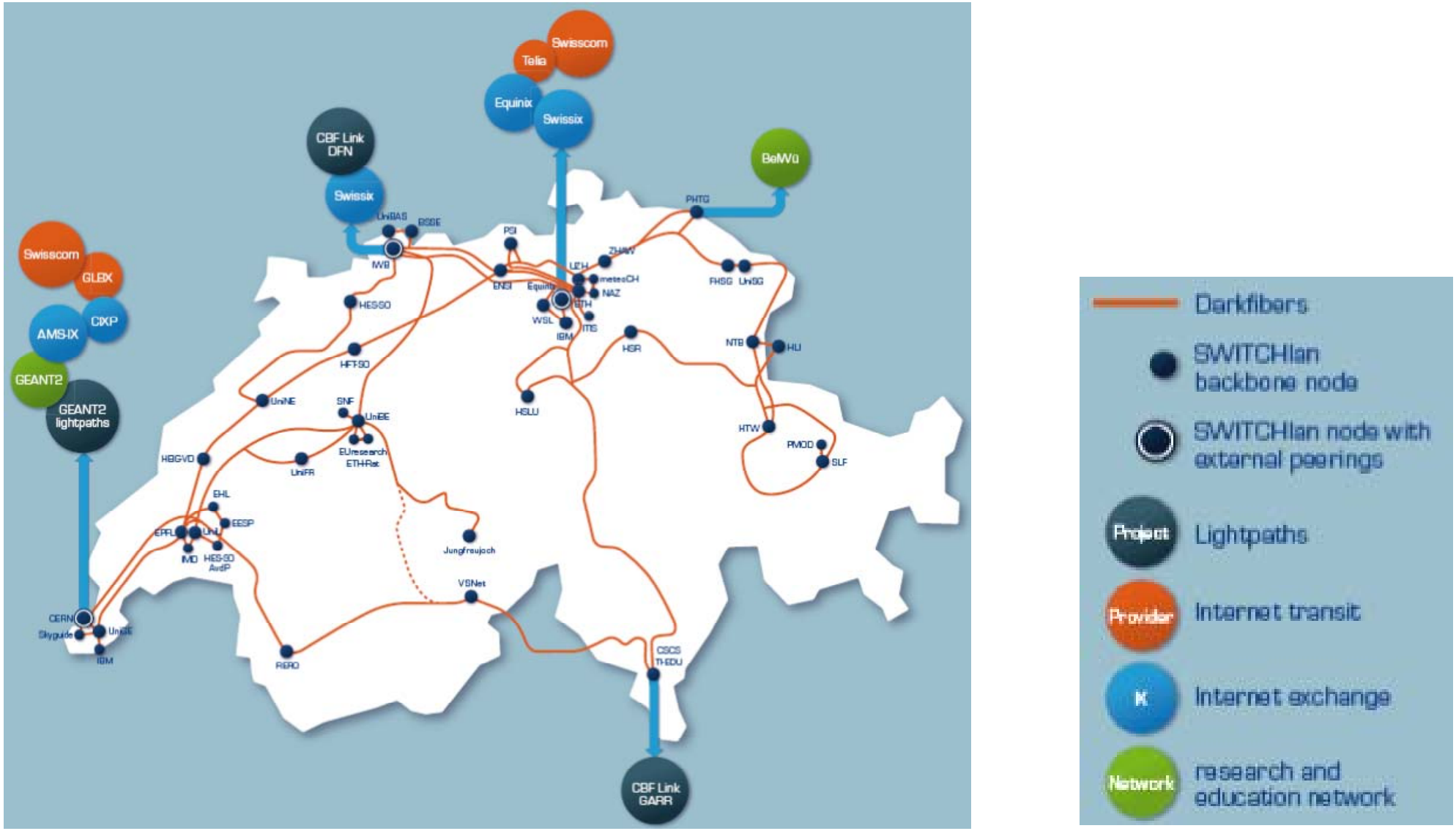

Example – Regional ISP: Switch 2019

- “Heat Map”
  - Corresponding to the geographical locations
  - Interconnections between sites represent the “cable”, which is a fiber
  - Relevance for traffic management purposes

  - Blue – low usage
  - Red – high usage

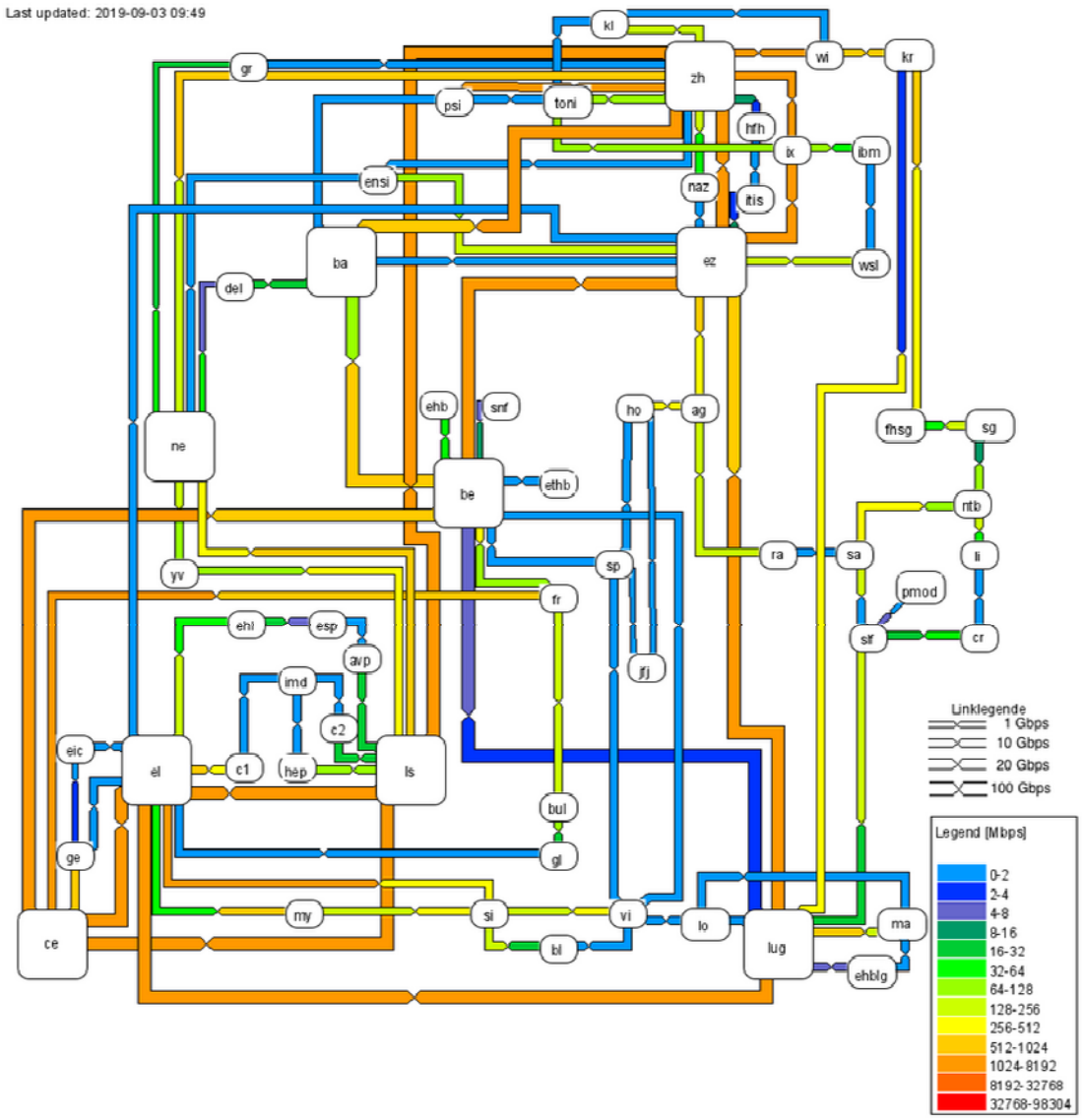

https://traffic.lan.switch.ch/pub/swiss-map/

Interconnection Regimes (1998) – History

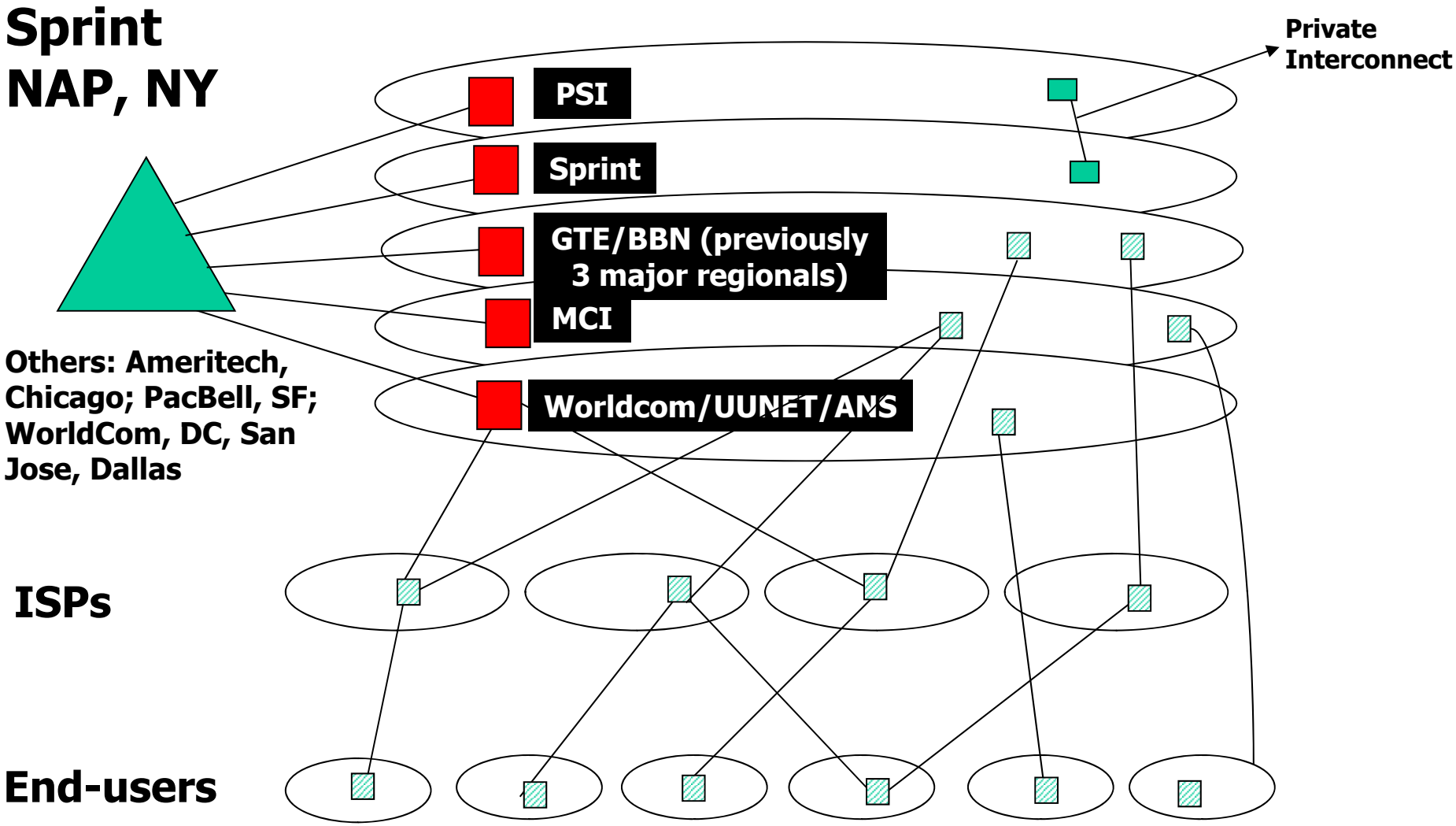

Internet Exchange Map 2019

- 300+ active Internet exchanges in 500+ sites/buildings

https://www.pch.net/ixp/dir
https://www.internetexchangemap.com/
https://www.datacentermap.com/ixps.html

Eastern Telegraph Company Network (1901)

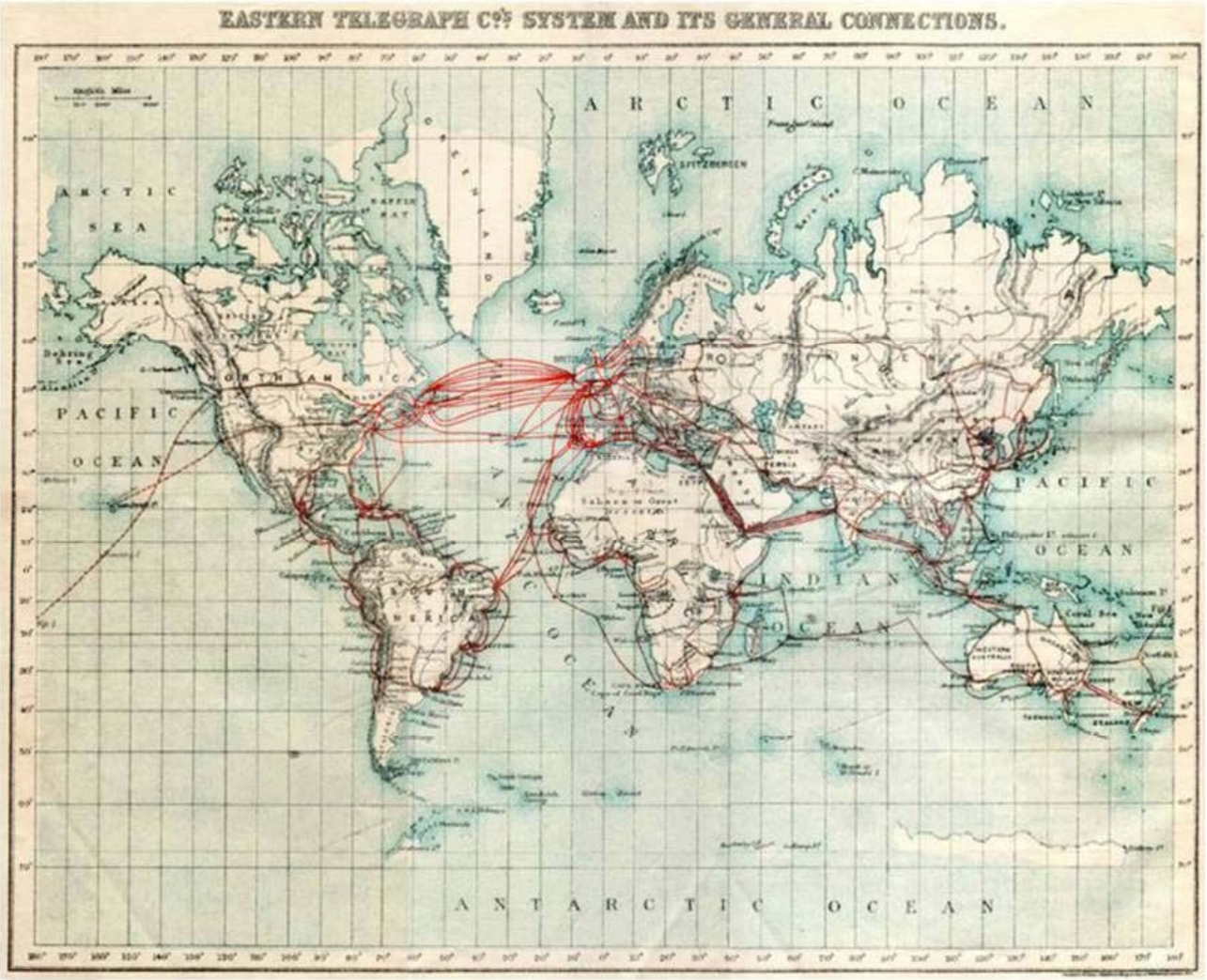

https://en.wikipedia.org/wiki/Submarine_communications_cable

Undersea Cable Topology and Capacity 2007

Undersea Cables 2017

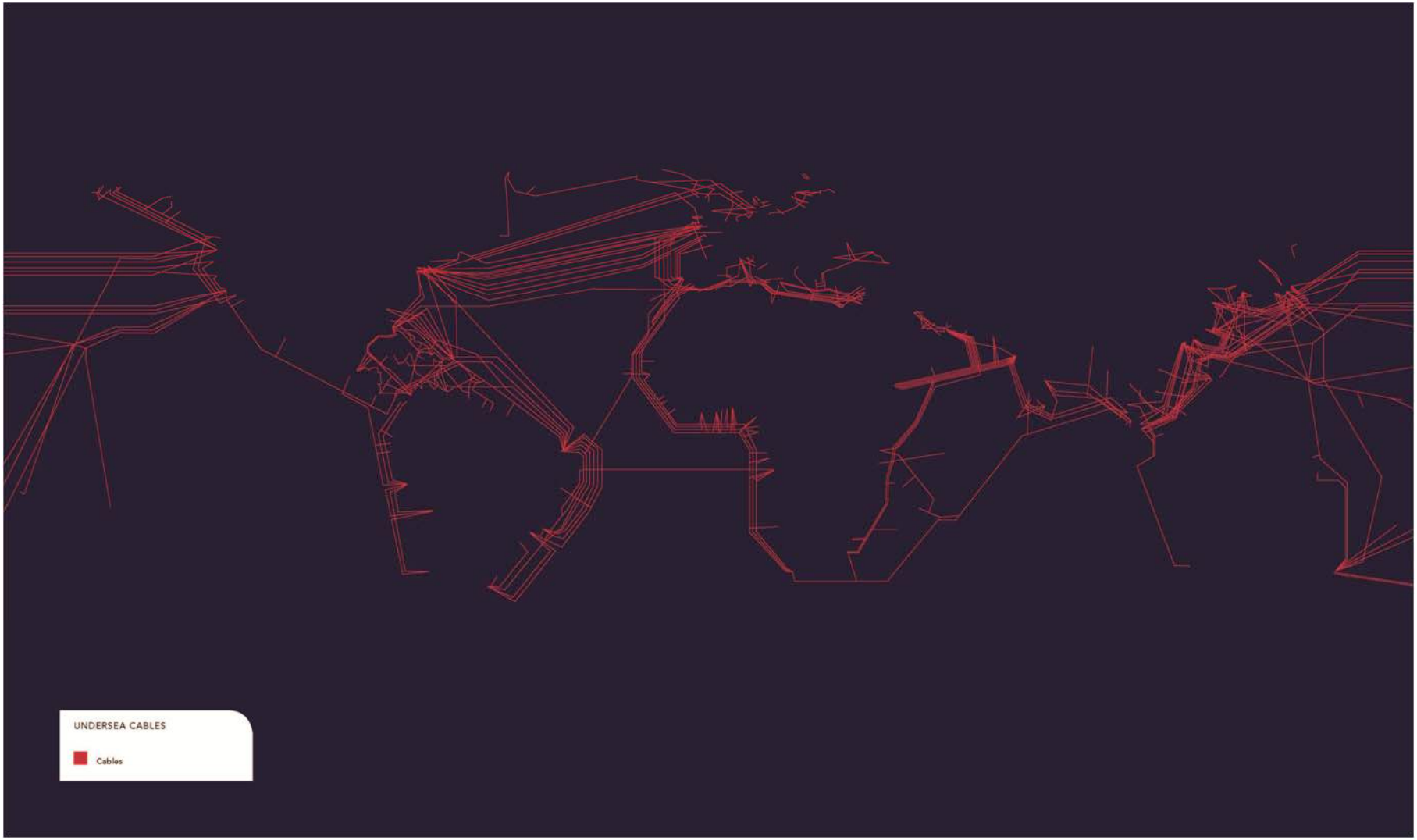

https://www.canadiangeographic.ca/article/six-new-ways-map-world

Broken Undersea Cables

- September 2, 2017: Southeast Asia Suffers Slow Internet Due to Broken Undersea Cables
  - Slow internet connection in Southeast Asia
  - Two tropical storms that hit the region
- August 6, 2017: Undersea cable fault strangles internet services
  - Major internet disruptions in Pakistan
  - Fault in the India-Middle East-Western Europe (IMEWE) submarine cable
- In contrast from November 23, 2014 New documents leaked by Snowden reveal the crucial role of a Vodafone-owned company in wiretapping of undersea cables for massive surveillance

Fully Meshed Peering Structure

- Avoiding long paths by point-to-point bilateral peering schemes.
- Interconnection and routing circuits required:

  $(N^2 – N)/2$ for N providers
- Scalability problems.

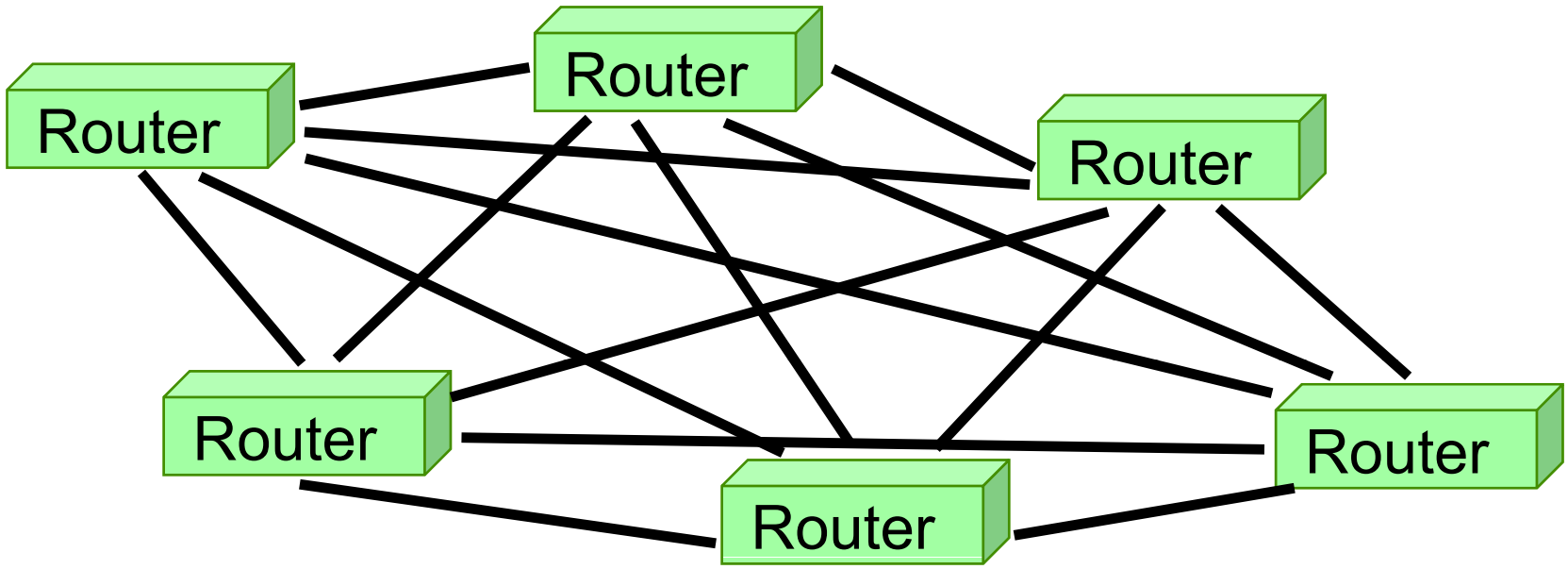

Router represents an ISP

Exchange Router

- Interconnection and routing circuits required:
  N for N providers
- Simplification and scalability.
- Multilateral peering with all interconnected peers.
- Active policy element, overrules provider's policy.

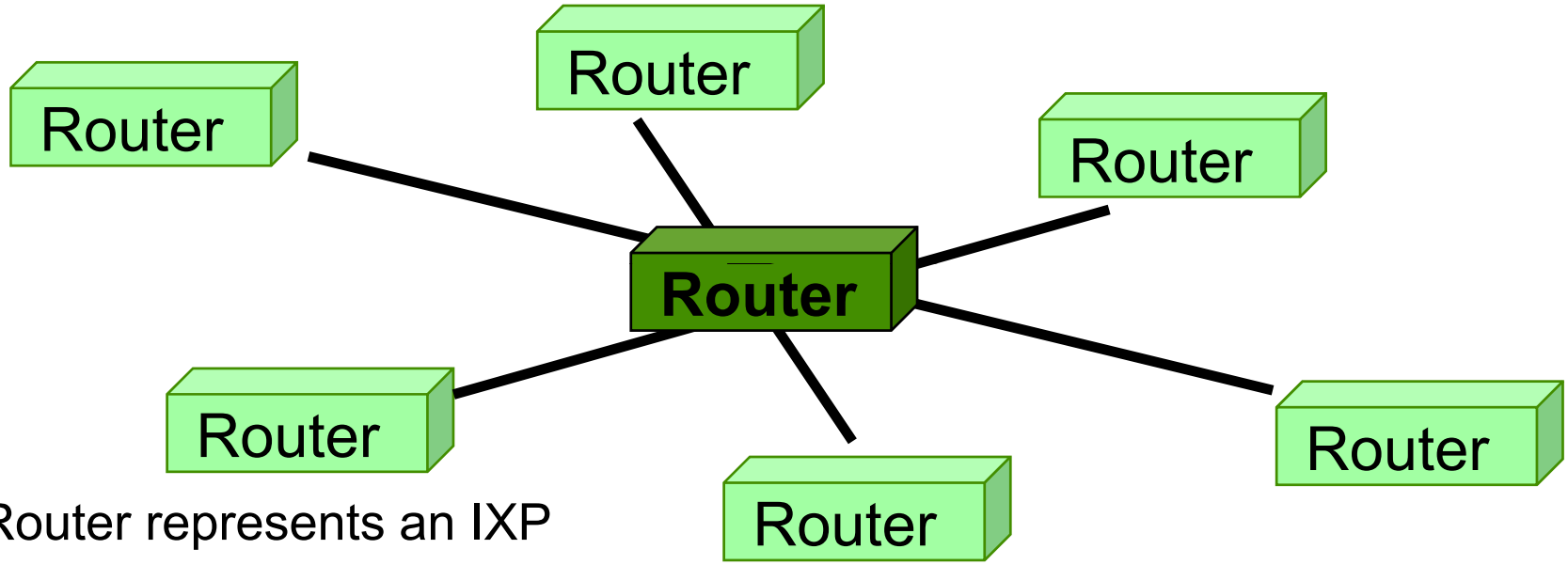

Dark Router represents an IXP

Exchange Switch

- Local layer 2 switch (LAN) in the exchange element.
- Bilateral peering with each others router.
- Interconnection circuits required: N for N providers
- Routing circuits required: $(N^2 – N)/2$ for N providers
- Policy-based preference for local forwarding tables.

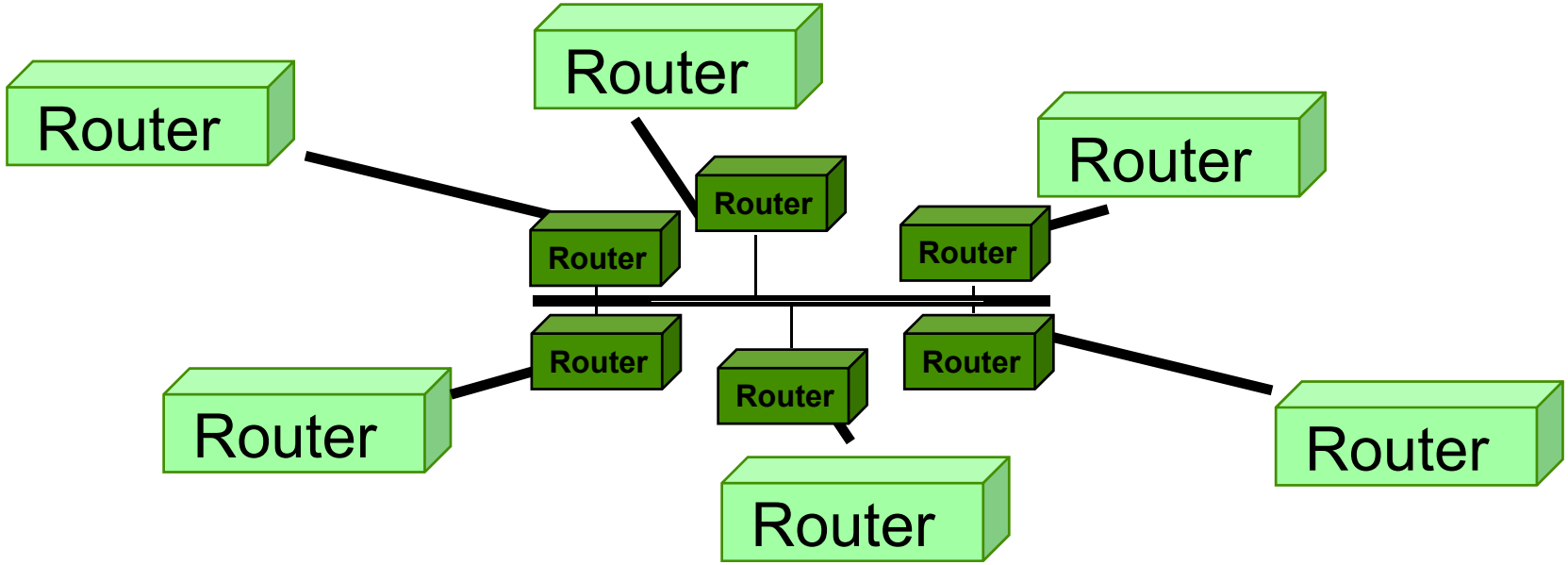

Distributed Exchanges

- Large geographical distances between providers.
- Uniform access technology per provider required.
- Switching requires content resolution, signaling.
  - Increased throughput by reduced signaling latency only.
- Peering virtual circuits.

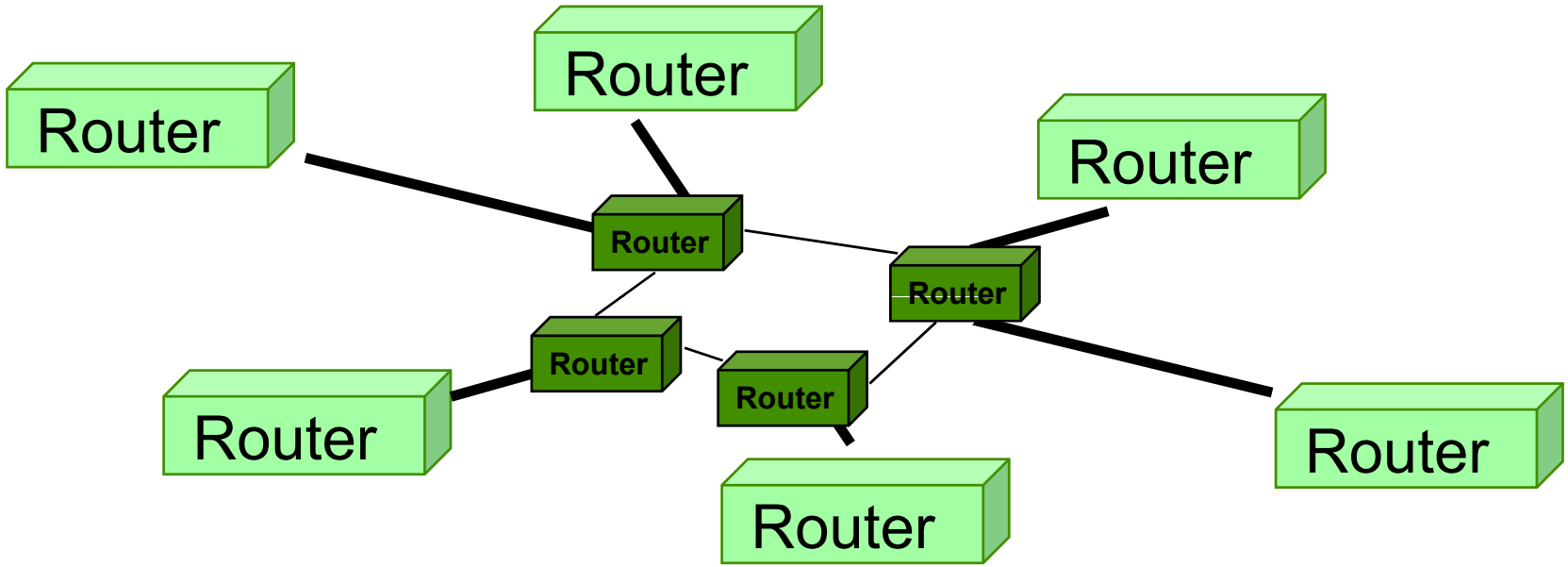

Co-location Model

- Extensions broadens the model by other services:
  - More than a pure routing and traffic exchange role.
  - Content provider supported, *e.g.*, with high volumes, selection of non-local transit providers.
  - *E.g.*, Multicast, Web, DNS, policy-based route services.

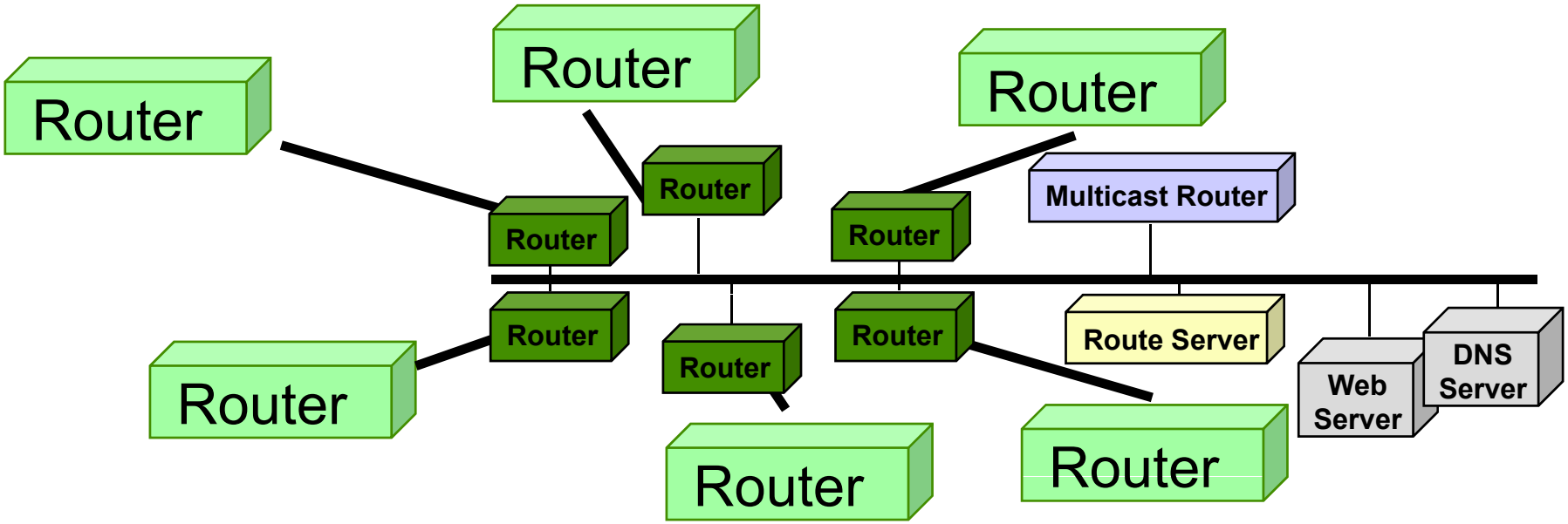

Network Access Points (NAP)

- Exchange provider between regional ISPs to execute bilateral peering and transit purchase venue to execute purchase agreements with transit ISPs.
- Operational complexity (business agreements).

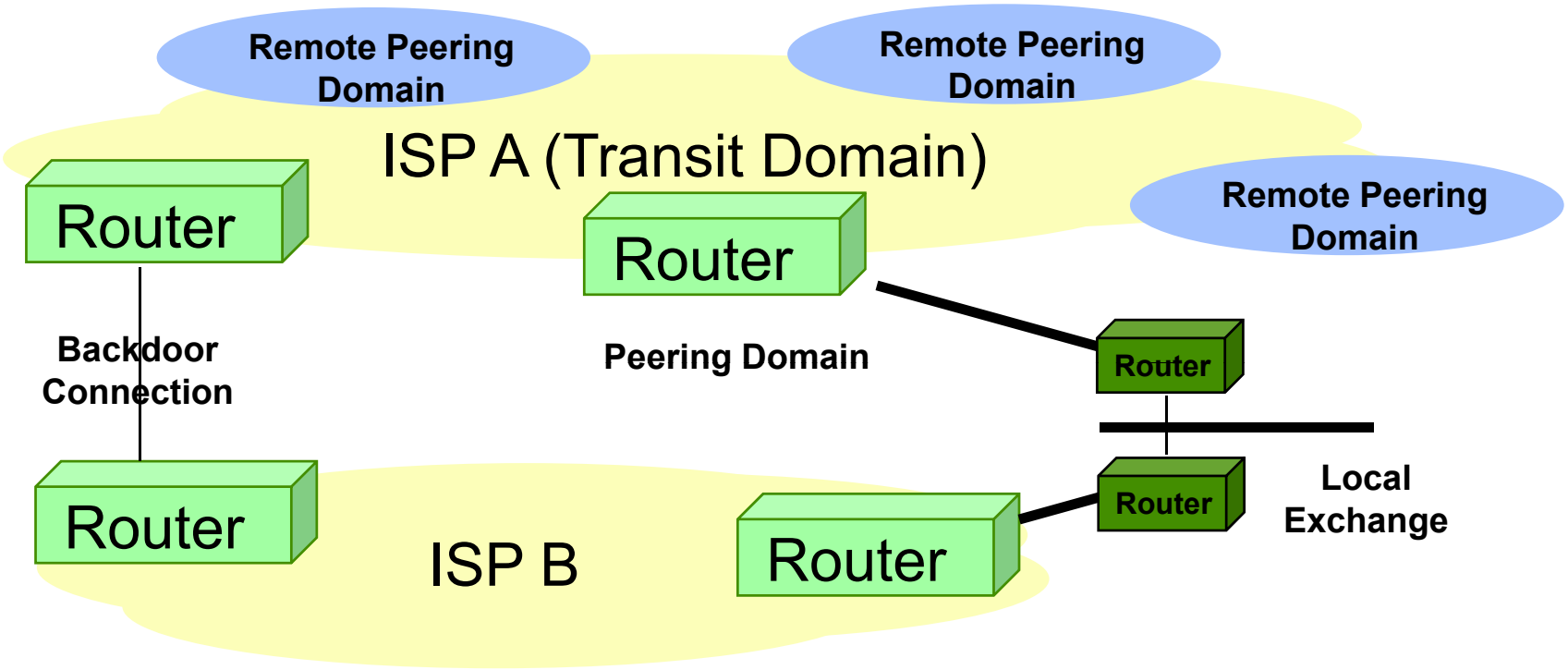

Internet Exchange Point (IXP)

- IXP is a physical location through which Internet infrastructure (networks) run by ISPs are connected
  - Locations exist on the “edge” of different networks
  - Allowing network providers to share transit outside their own network
- Technology
  - Layer 2 LAN up to a few Tbit/s on local backbone
  - IXPs use BGP
  - Interconnection between different IXPs
    - PNI (Private Network Interconnect): dark fiber

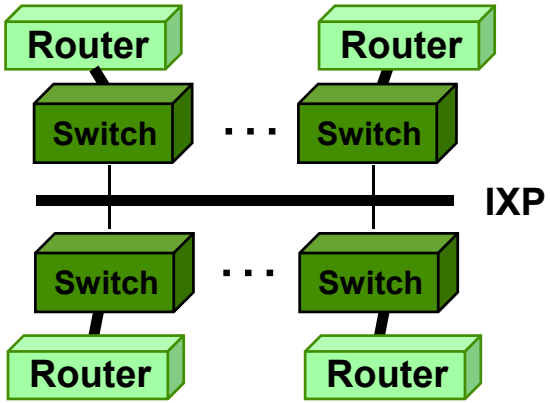

- Technical characteristics
  - ISPs shorten their path to the transit, thereby reducing latency, improving round-trip time, and potentially reducing costs
  - Backbone ISPs can carry local traffic, but it can lead to bad performance
    - “Tromboning”: ZRH to FRA to GVA worse than ZRH to GVA direct
  - Database of networks, go-to location for interconnection data: https://www.peeringdb.com/

Business Models for Exchanges (IXP, CIX)

- Desirable attributes:
  - Operated by a neutral party (non-ISP).
  - Robustness and secure design.
  - Scalability to many interconnected ISPs.
  - Preferred location in high-density ISP markets.
  - High performance and continuing QoS.
  - Fiscally and business stable.

- Problems:
  - Flat-fee structure increases traffic and in turn implies the exchange operator to face greater load. (Endless cycle?)
  - Usage-sensitive structure requires monitoring individual ISPs traffic. (Refrain from private data traffic?)

Example — Switch Peering Policies

- SWITCH does not require a formal peering agreement, but is willing to sign one should the peering partner wish to do so.
- General Guidelines
  - The peering with another Internet service provider shall be in the interest of both organizations SWITCH and the ISP. For SWITCH measures of interest are:
  - Size of ISP's network and thus expected amount and symmetry of traffic between SWITCH and the ISP
  - Other direct benefits for the Swiss academic community
- SWITCH does normally not peer with small organizations that are customers of organizations that already peer with SWITCH.
- Peering Points (preferably done at these two locations):
  - SWITCH is present at CIXP (CERN Internet Exchange Point), Geneva
  - IX Europe Zurich
  - As an exception peering is also possible at other SWITCH PoPs (located at the Swiss Universities) under the condition, that the ISP takes over the responsibility for the communication link to the SWITCH PoP.

Internet Technology – Networking Alternatives

- Plain old Internet
  - Packet-based
  - Best effort
  - No services
  - No guarantees
- Advanced newer Internet
  - Separation of various service needs
    - Integrated Services
    - Differentiated Services
- New Internet
  - Multi-protocol Label Switching (MPLS)
  - Reservation protocol-based signaling
  - Dedicated networks
  - Virtual Private Networks (VPN)
  - Overlays
- Future Internet

IntServ Implementation

- Integrated Services Architecture (IntServ) supports best-effort and guaranteed services.
- Traffic control functions:
  - Admission control,
  - Packet classifier, and
  - Packet scheduler.
  - Optional: Policy control (COPS).
- Protocol support:
  - Resource reservation, *E.g.*, RSVP.
- Host and router require similar functionality.

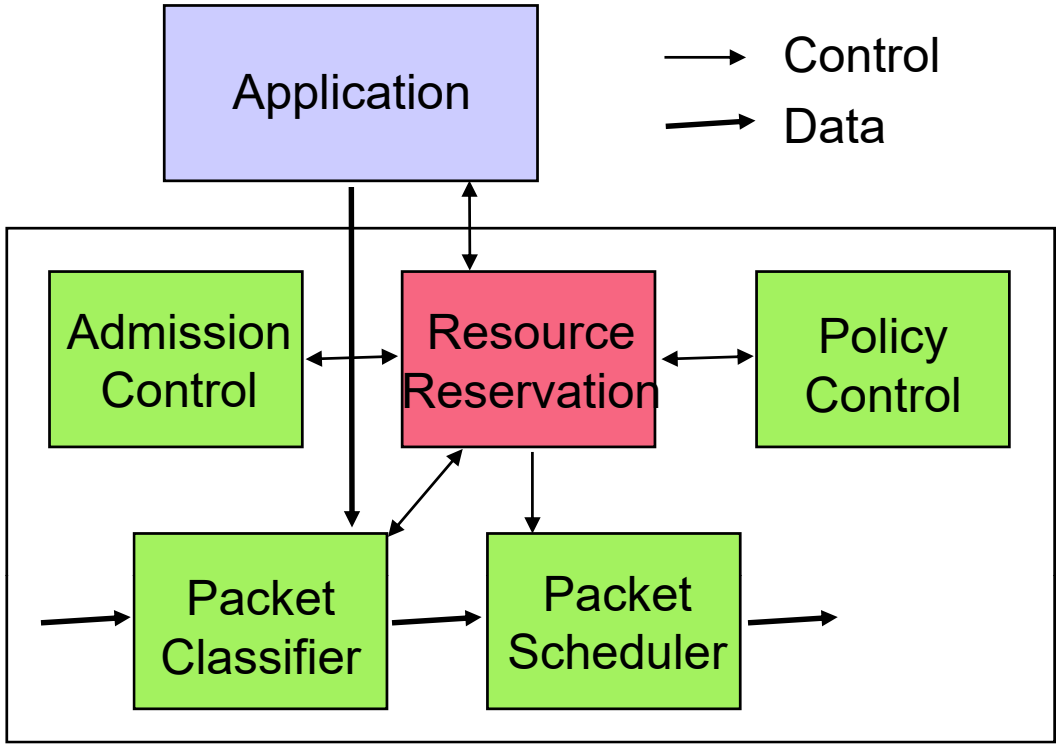

COPS: Common Open Policy Service
RSVP: Resource Reservation Protocol

Potential Problems of IntServ

- Resource reservations for transaction-based traffic?
  - Higher overheads of setting-up a reservation.
  - Difficult determination of required resources.
- Overhead of authentication, authorization, and accounting per flow?
  - Contractual basis for reservations between user/provider.
  - Aggregated reservations and integrated support.
- Existence of a settlement system?
  - Charges are distributed to all parties along a path.
  - Multiple providers need to interact.
- Scalability problems?
  - Efficient classifiers and state are required.

The DiffServ Approach

- Requirements for Differentiated Services proposals:
  - Aggregated bandwidth allocation without the need of per-session signaling and complex router state,
  - Aggregated QoS guarantees with edge-complexity,
  - Long-term service contracts within a single domain,
  - Integrated and simplified accounting,
  - Better traffic isolation for performance predictability, and
  - Better services for users willing to pay more.

- A set of new proposals for DiffServ:
  - Premium service,
  - Assured service (profile-based tagging), and
  - User-share Differentiation.

Services Integrated Internet

	Best-effort	IntServ	DiffServ
QoS Guarantees	no	per data stream	aggregated
Configuration	none	per session (dynamic)	long-term (static)
Zone	entire network	end-to-end data stream	domain-oriented
State Information	none	per data stream, in router	(none, in BB, in edge router)
Required Protocols	none	signaling (RSVP)	bit fields (BB, COPS)
Status	operational	matured	worked on

IntServ: Integrated Services, DiffServ: Differentiated Services, QoS: Quality-of-Service
RSVP: Resource Reservation Protocol, BB: Bandwidth Broker, COPS: Common Open Policy Service

Integration of IntServ and DiffServ (1)

- QoS provision and accounting in heterogeneous IP-based networks.

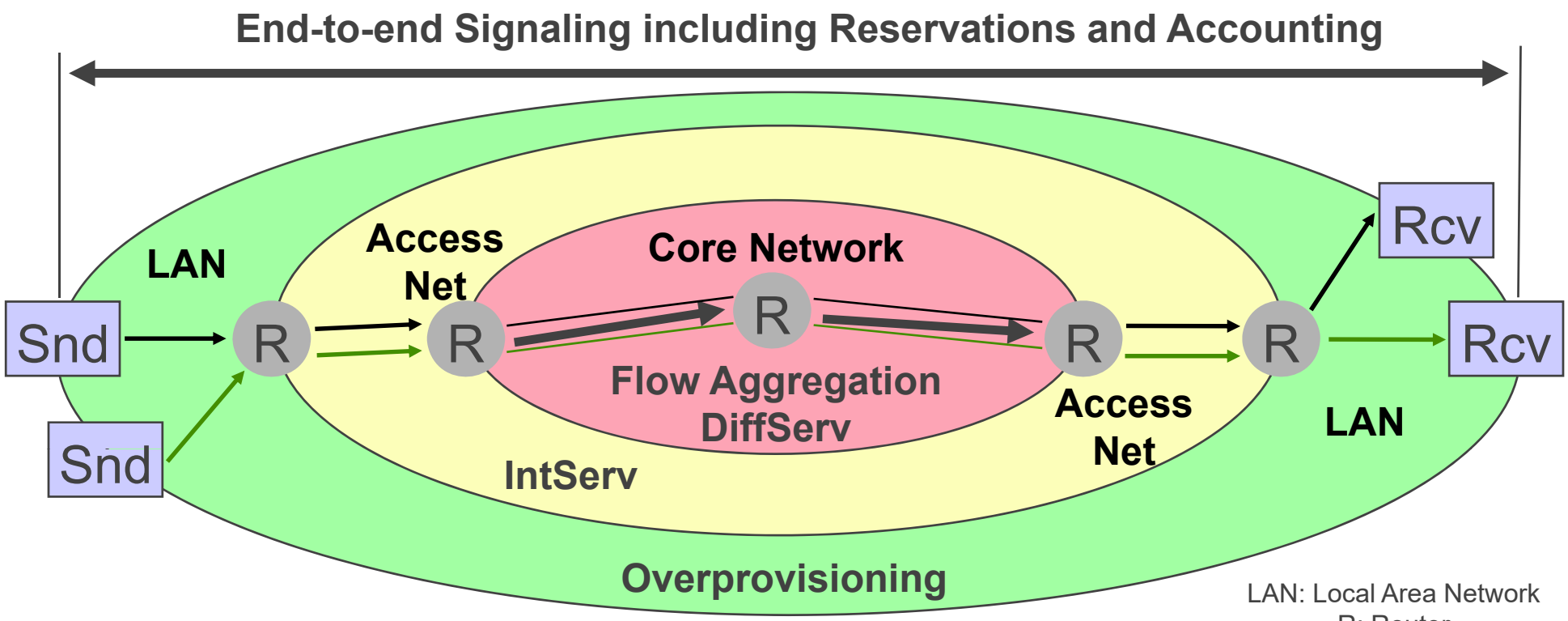

LAN: Local Area Network
R: Router
Snd: Sender, Rcv: Receiver

- IntServ forms a specification interface for charging.

Integration of IntServ and DiffServ (2)

- LAN:
  - RSVP applied to hosts for signaling, pricing, and payments.
  - Traffic control remains inside routers

- Access networks:
  - RSVP "processes" traffic control and contains financial information. Provision of RSVP/RAP suitable.
  - Allocation of DiffServ bandwidth, *e.g.*, based on RSVP.

RAP: RSVP Admission Policy

- Core network:
  - Flow isolation and charging at ingress routers.
  - Tagging with per class queuing.
  - RSVP extensions valid between ingress and egress routers.
  - RSVP transparent to core network.

IP Packet-based Backbones

- IP requires the routing to determine the path for each and every IP packet in transit.
  - Mandatory functionality!
  - But, in case of too many destinations, routing tables may “explode”!
  - Aggregation of routes possible, especially for backbone networks.

- Efficient longest prefix matching requires complex algorithms.
  - Simple implementations are too slow for large backbones.
- *Each* router maps IP packets to a “Forwarding Equivalence Class”.
  - This requires large filter databases in *every* backbone router.
- IP routing paradigm does not provide adequate traffic control mechanisms for
  - *E.g.*, load balancing, multi-path routing.

Wired Technologies

Multi-protocol Label Switching (MPLS)

Overlay Network Model

ATM network appears as single link between each router pair.

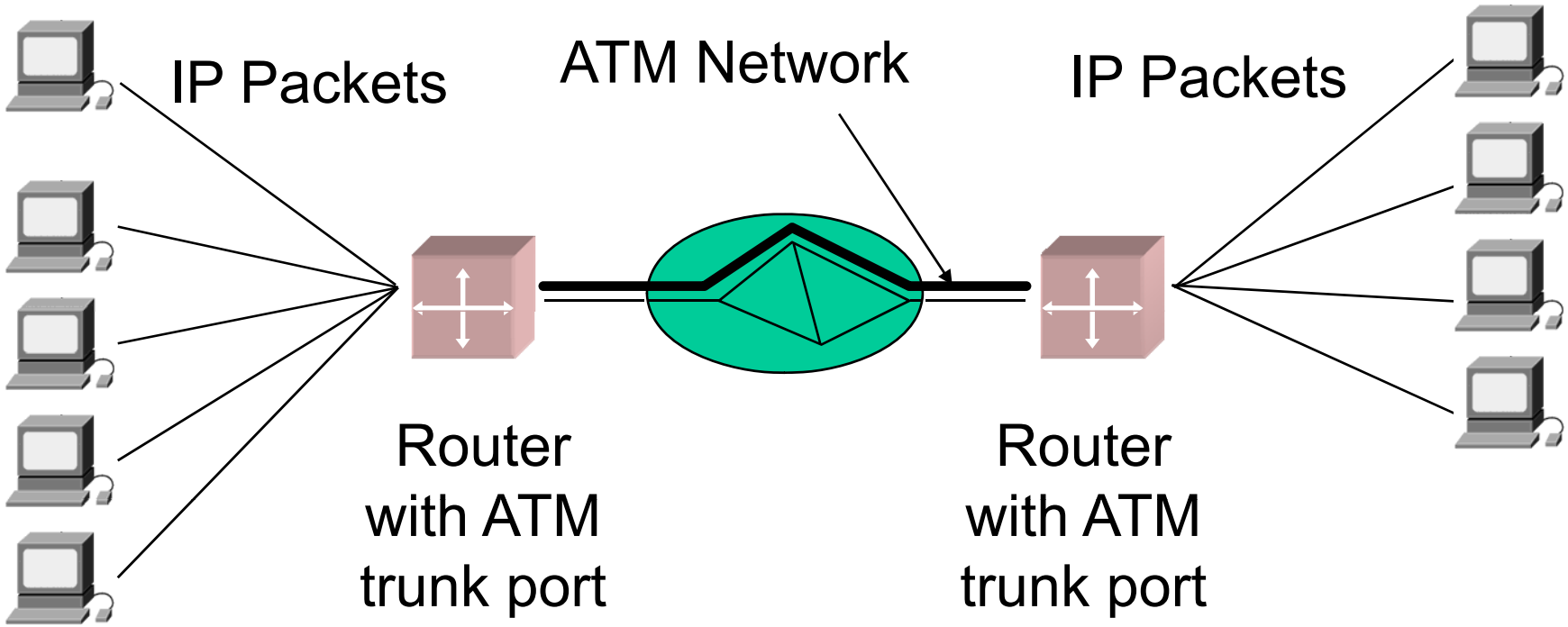

Router solution was used by SWITCH between Swiss universities.

Assessment of the Overlay Model

- Advantages:
  - Data forwarding in the backbone is very efficient.
  - VPCs allow for an explicit control of traffic flows.
- Drawbacks:
  - VPCs require manual configuration.
  - For n peering routers, n^2 VPCs or SVCs are needed. This limits the scalability of the approach.
  - If SVCs are used, routing is done in both the IP and the ATM layer.
  - Two independent networks have to be operated, managed, and maintained.

IP Switching (1)

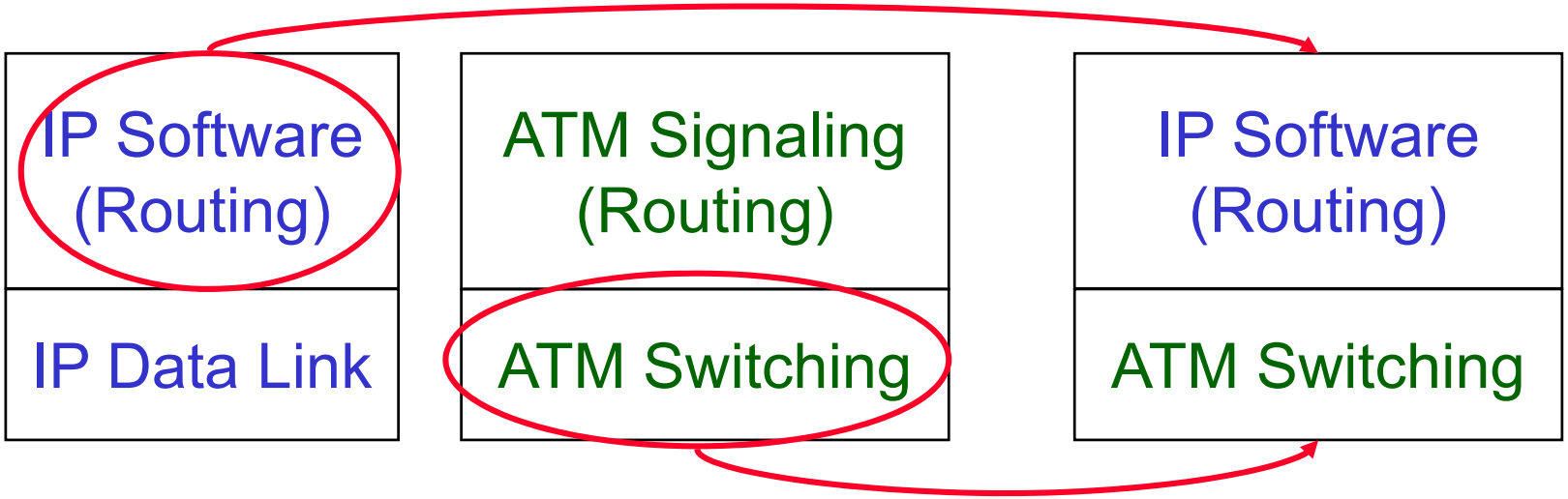

"The best of two worlds"

IP Switching (2)

- IP Switching Architecture:
  - Definition of flows for IP packets with similar source and destination address.
  - Long living flows are supported by setting up an ATM connection.
  - Short living flows are routed (layer 3).

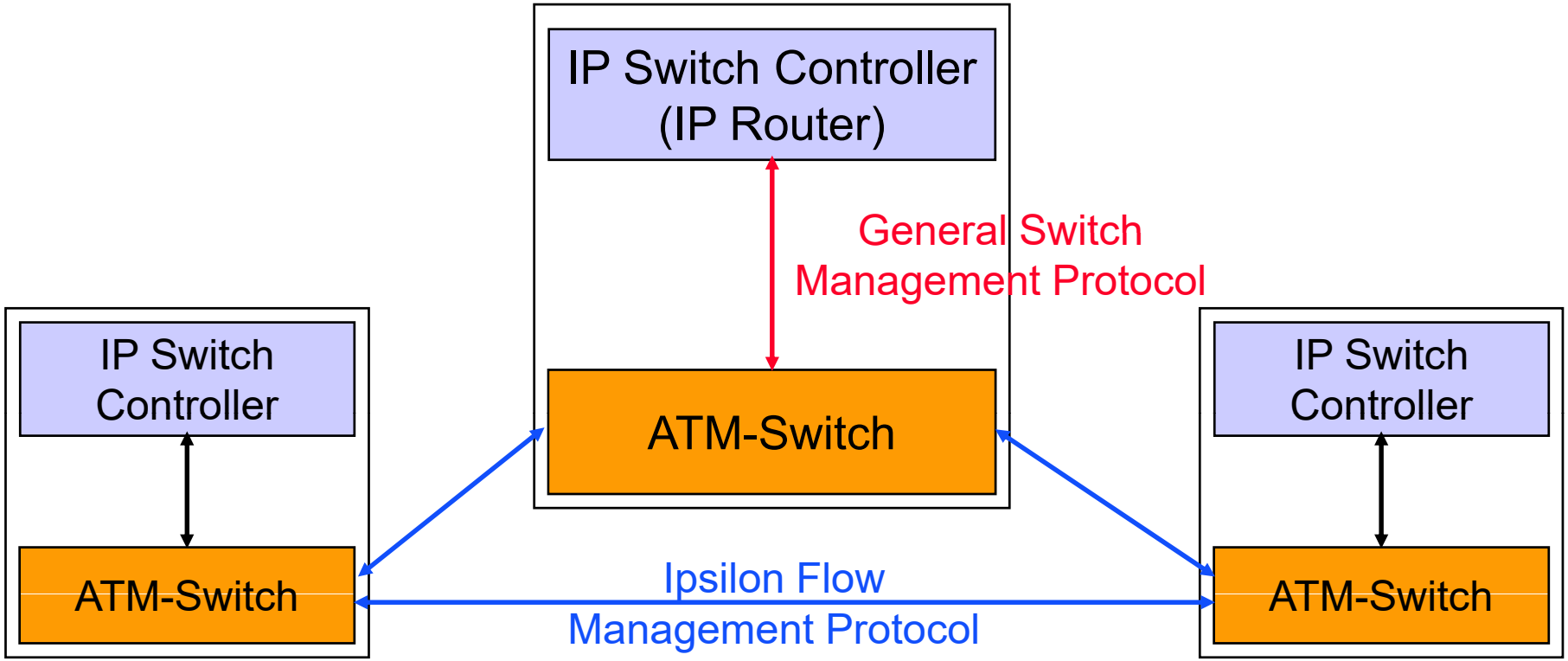

Setup of an ATM Connection for Flows

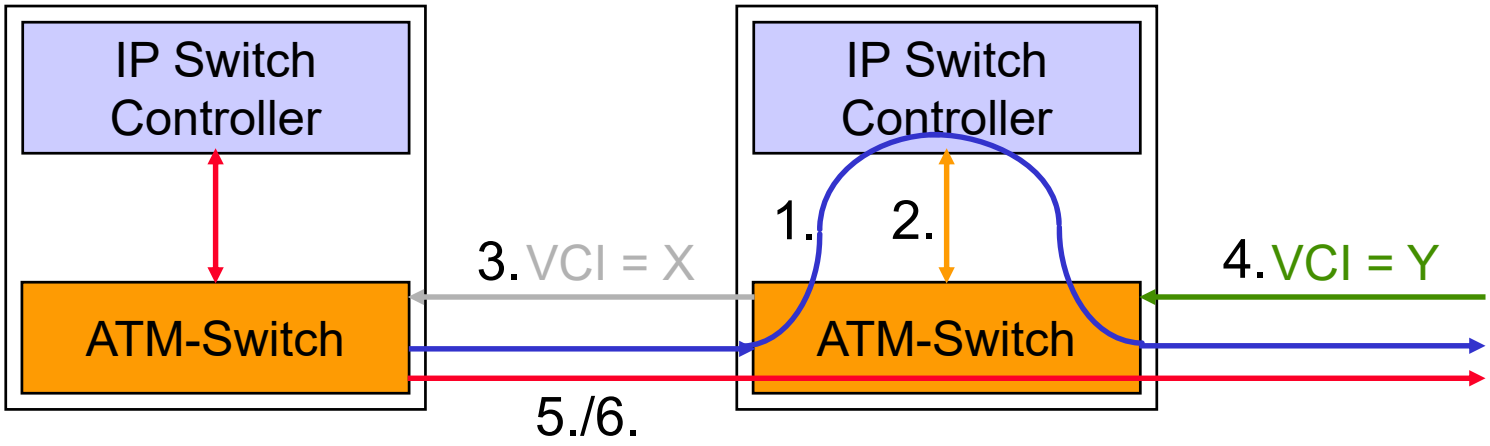

1. Arrival of IP packet and forwarding via IP switch controller.
2. Switch controller decides on setup of an ATM connection.
3. Send re-configuration to upstream switch to use separate VPI/VCI.
4. Re-configuration message arrives at downstream switch.
5. Cut-through link is connected.
6. Cut-through link is disconnected, if configuration messages are missing.

Assessment of IP Switching

- Advantages:
  - Data forwarding in the backbone is very efficient.
  - Architecture is homogeneous and fairly simple.
  - GSMP and IFMP are published as informational RFC 2297 and RFC 1953, respectively.

- Drawbacks:
  - Scalability is limited due to a potentially large number of traffic flows.
  - Since path is only set up after a number of packets have been processed, a high latency results.
  - Requires high performance packet classifiers.
  - Only applicable to ATM networks.
  - Ipsilon has vanished from the market.

Multi-Protocol Label Switching (MPLS)

- IP Switching's basic idea has triggered follow-up solutions:
  - Tag Switching [Cisco]
  - Cell Switch Router [Toshiba]
  - Aggregate Route Based IP Switch ARIS [IBM]
  - IPSOFACTO [NEC]

- Multi-protocol Label Switching (MPLS):
  - Standard was finally developed by the IETF.

MPLS Overview

- MPLS consists of two components:
  - Network independent forwarding component.
  - Control component.

- Forwarding based on simple, fixed-sized labels:
  - VPI/VCI for ATM.
  - Small “shim” label header for native IPv4 networks.
  - IPv6 flow label.

- Control component creates bindings between labels and routes using combinations of:
  - Layer-3 destination prefix, forwarding equivalence class.
  - IP “Class of Service” bits.
  - Application flows.
  - Explicit routing (configured by network manager).

MPLS Architecture Overview

- Label Distribution Protocol:
  - Distributes labels between devices.
- MPLS Edge Routers:
  - Full-function layer-3 routers.
  - Apply labels to packets.
  - Run the Label Distribution Protocol and standard routing protocols.
- Label Switch Router:
  - Forward packets based on labels.
  - Run the Label Distribution Protocol and standard routing protocols.

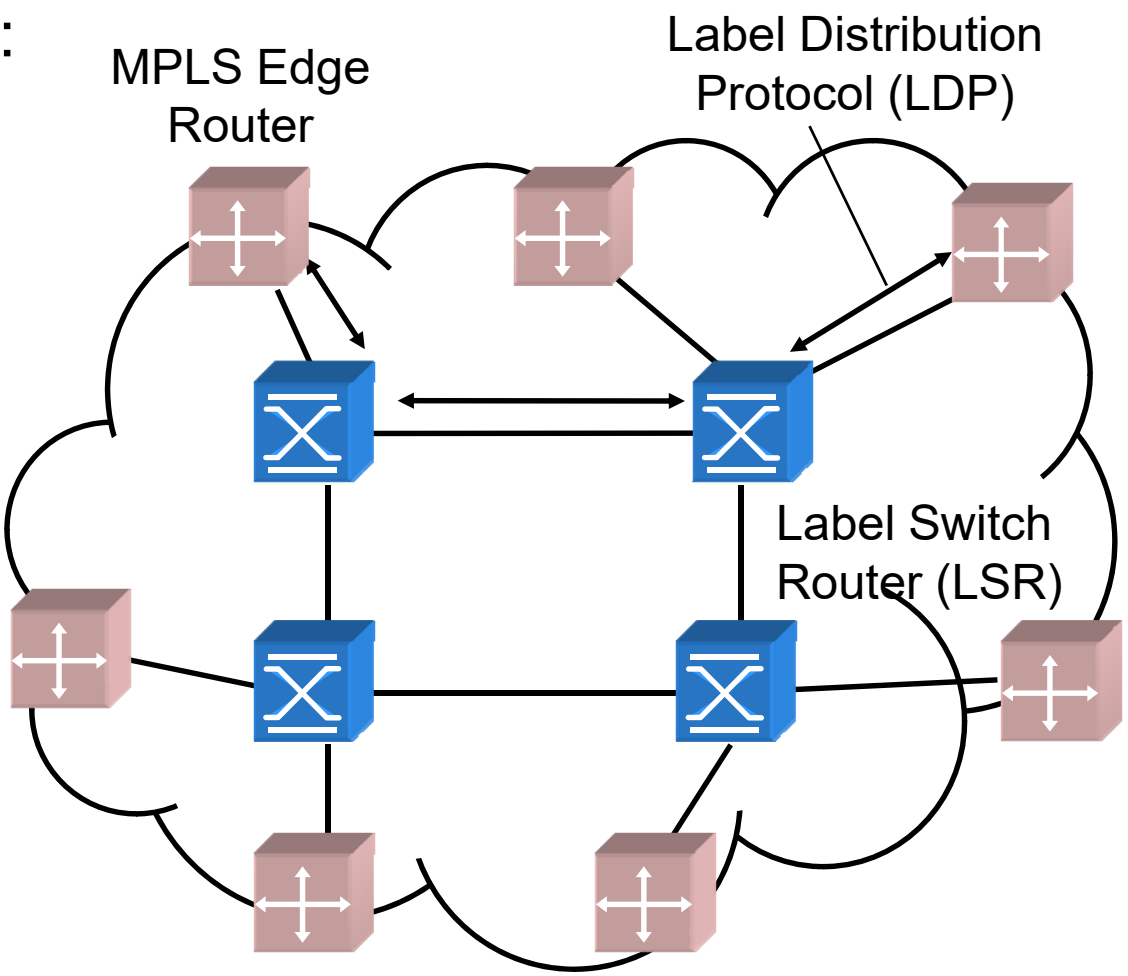

MPLS Operation

1) Standard Routing Protocol (OSPF, BGP, ...) used to establish routes in Edge Routers and Switches
2) Label Distribution Protocol builds up label bindings
3) Ingress label switch router “labels” packets
4) Label switches switch packets based on the label (no network layer needed)
5) Egress label switch router removes label from packets

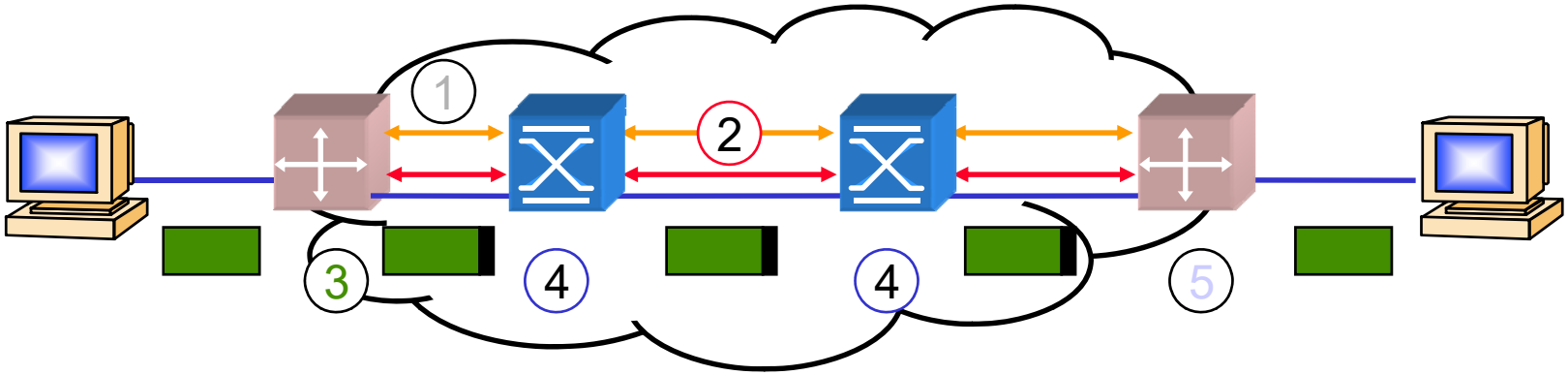

Example label bindings

In label	*Address Prefix*	*Out Interface*	*Out label*
1	129.132	1	4
2	171.56	2	8

Advantages and Drawbacks of MPLS

- Advantages:
  - Allows for high performance backbones with multi-gigabit/s links.
  - Suitable for large backbones due to multipoint-to-point trees and topology driven approach.
  - Offers a wide range of traffic control mechanism (topology-, request- or traffic driven, configured).
  - Can be used on different layer 2 network technologies (not just ATM).
  - MPLS Switching is an IETF standard: RFC 3031.

- Drawbacks:
  - High flexibility *may* limit interoperability.
  - Per-flow QoS is not feasible in MPLS.

MPLS Evolution (Review of a Process)

ATM as a solution for high-speed packet switching based on fixed-sized cells.

"ATM to the Desktop"

"ATM replaces IP"

Fast Forwarding in IP becomes a hot issue.

IP over ATM technologies

The "overlay model".

MPLS working group in the IETF started.

Primary goal:

"Fast forwarding"

IETF: RFC 3031 MPLS Architecture

Ipsilon's IP switching:

ATM switching hardware forwards IP packets.

WWW appears

IP gains importance

Cisco: Tag switching
IBM: ARIS

…and many others

Shift in focus:

Fast forwarding solved in hardware, traffic control and traffic engineering main focus of MPLS.

1990 1992 1994 1996 1998 2000 2002

Thanks to D. Bauer

Wired Technologies

Asynchronous Transfer Mode (ATM)

Broadband Integrated Services Digital Network

- Original target of a high performance, service integrated, and wide area network, called Broadband-ISDN:
  - Initially, Synchronous Transfer Mode (STM) approach:
    - Missing flexibility due to fixed bandwidth of 2 and 140 Mbit/s.
  - Late 1987, Asynchronous Transfer Mode (ATM) adopted.

- High data rates:
  - 155 Mbit/s, 622 Mbit/s, 2.4 Gbit/s, and up,
  - Upward compatibility (support of 64 kbit/s channels).
    - Usable in the LAN, MAN, and WAN environment.

- Separation of concerns:
  - Data transfer and
  - Signaling in terms of out-of-band control data.

B-ISDN Standardization

- International Telecommunication Union (ITU):
  - Formerly, CCITT and CCIR.
  - Telecommunication Standardization Sector (ITU-T):
    - Wide area communications, such as
      - Packet-based network (X.25) ,
      - B-ISDN (I.121, I.150, I.361, I.362, I.363, …), or
      - Broadband signaling (Q.2931).
    - Radio Communication Standardization Sector (ITU-R).
- ATM Forum (since fall 1991):
  - Industry, equipment development and marketing,
  - Fast employment of ATM technology, and
  - Support of the ITU-T standardization process.
- ATM in place, but, the B-ISDN not existent.
  - ATM AAL 5 (see later) used in xDSL technology (see end of M2)

B-ISDN Reference Model – I.321

- Modeling communication systems is done in a logical hierarchical structure *as* in, *e.g.*, the ISO/OSI BRM.
  - Relation between OSI and B-ISDN/ATM undefined.
  - Similar plane approach has been used within N-ISDN.

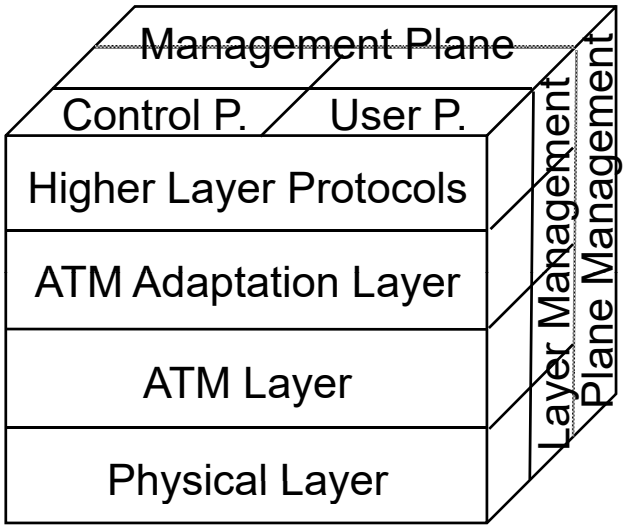

P.: Plane

B-ISDN Reference Model – Planes

- User plane:
  - Transmission of user data,
  - Supervision of data transfer, and
  - It is comparable to an N-ISDN B-channel.
- Control plane:
  - Transmission of signaling data,
  - Establishment, monitoring, and tear-down of connections,
  - It is comparable to an N-ISDN D-channel.
- Management plane:
  - Transmission of management data,
  - Coordination between levels in the entire system, and
  - Management within a certain level.

B-ISDN Reference Model – User Plane

- Physical Layer (PHY):
  - Transmission of bits,
  - Generating of transmission frames, and
  - Detection of cell boundaries.

- ATM Layer (ATM):
  - Transport of ATM cells,
  - Addressing of virtual connections,
  - Multiplexing/demultiplexing of ATM cells, and
  - Flow- and access control for end-systems.

- ATM Adaptation Layer (AAL):
  - Support of different ATM transport services,
  - Convergence functions, such as error control, synchronization,
  - Segmentation and Reassembly.

Cell-based Switching

- Asynchronous Transfer Mode (ATM) is a concept for handling cells and dealing with cell-based switching independent of a particular physical network.
- Goal: Service integrated networks shall support many kinds of application requirements.

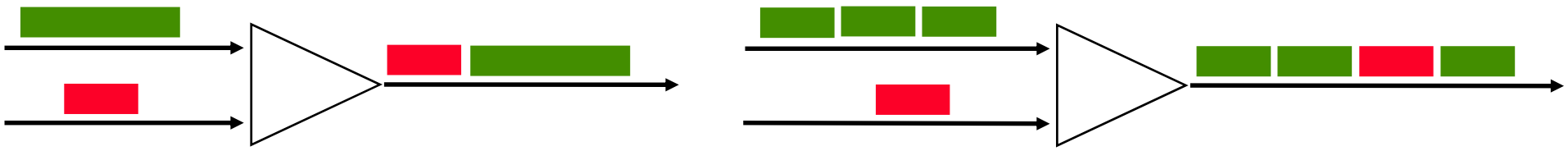

- Delay problems occur in case of sending packets of different length. Extremely long blocking can be avoided, if cells of fixed-size are used. If the overall cell length is too big, a similar problem appears.

Packets and Cells – Which Size to Use?

- Traditionally, packets are the organizational unit of networks to transfer user data.
  - User data split into packets: header (and trailer), data.
  - Packet header and trailer stripped, data reassembled.

- ATM utilizes cells at its lowest layer, instead.
  - Definition: A cell is a fixed-size, small packet.
- Important decision: What is the size of the cell ?
  - Effects on higher layer protocols.
  - Ratio of control information and data per cell:
    - Large cells: More control tolerable.
    - Small cells: Less control necessary, less wasted space.
- There is no general perfect size of a cell available.

ATM Layer – UNI Cell Format

- GFC: Generic Flow-Control used at the service interface.
- PT: Payload Type defines contents of a cell:
  - User data congested,
  - User data non-congested,
  - Operation And Maintenance (OAM) cells, and
  - Resource management cells.
- CLP: Cell Loss Priority to identify low/high priority cells.
- HEC: Header Error Control.

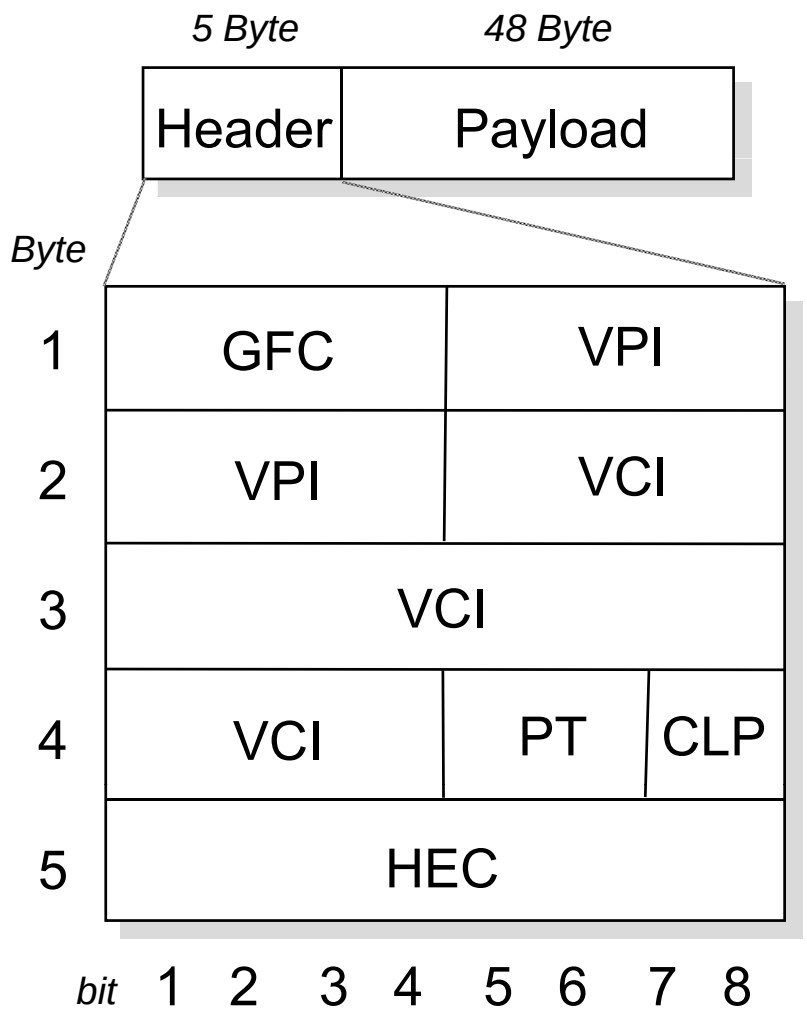

UNI: User-Network Interface

ATM Layer – NNI Cell Format

- VPI: Virtual Path Identifier comprises of 12 bit length.
- PT: Payload Type defines contents of a cell:
  - User data congested,
  - User data non-congested,
  - Operation And Maintenance (OAM) cells, and
  - Resource management cells.
- CLP: Cell Loss Priority to identify low/high priority cells.
- HEC: Header Error Control.

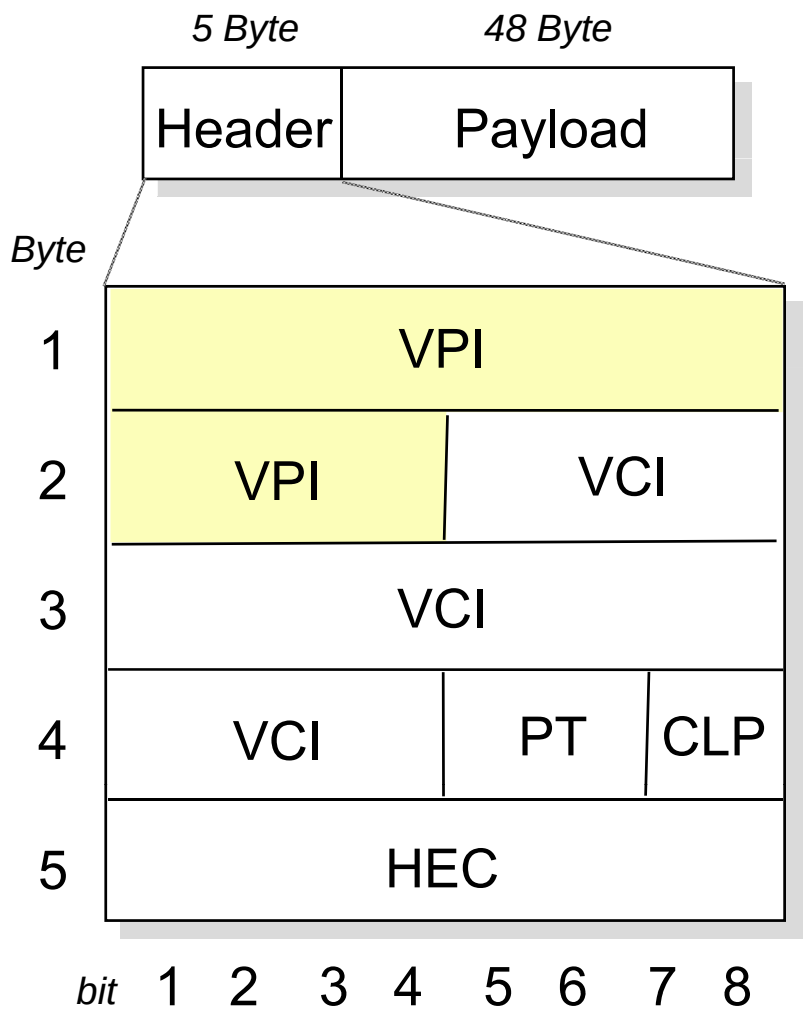

NNI: Network-Network Interface

Handling Cells – Segmentation/Reassembly

- To sent packets over cell-based networks, packets have to be segmented and reassembled again.

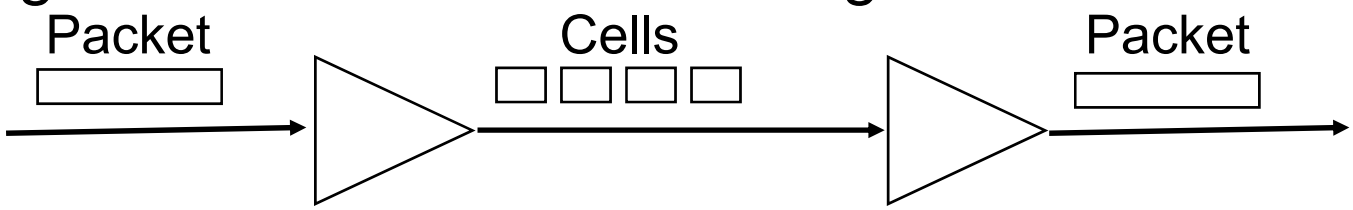

- The segmentation and reassembly functionality is placed right above the cell level.

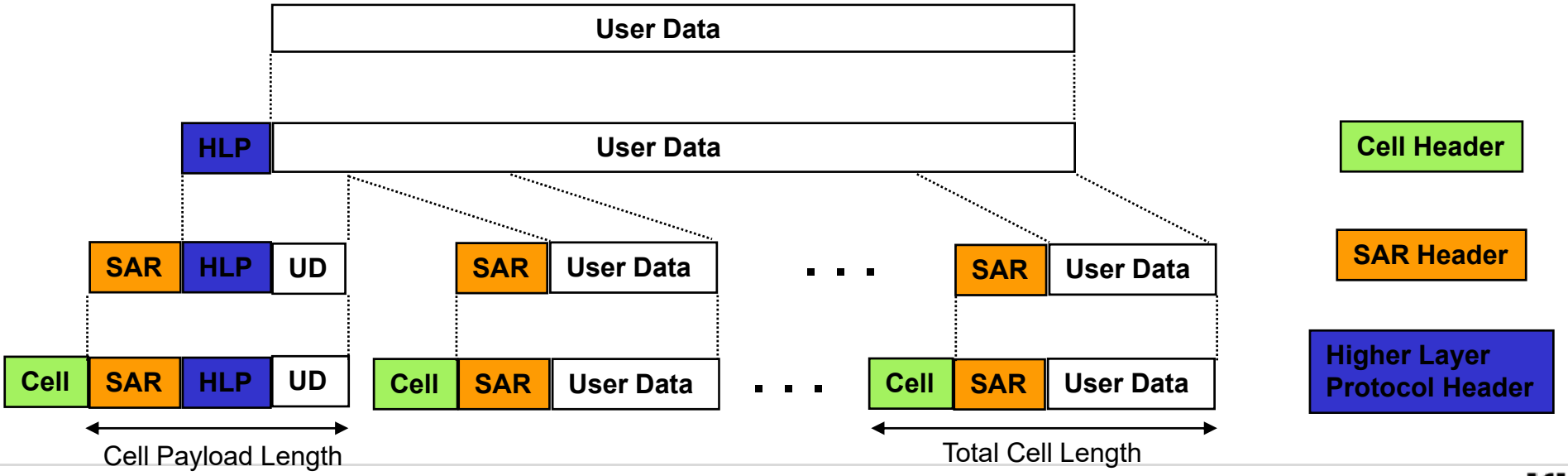

ATM Connections (1)

- Simultaneous support of many thousands of VCs (2^{16}) requires the ATM cell to carry the VCI field.
- Supporting many semi-permanent connections between endpoints, carrying many grouped VPs (2^8 or 2^{12}) requires the ATM cell to carry the VPI field.

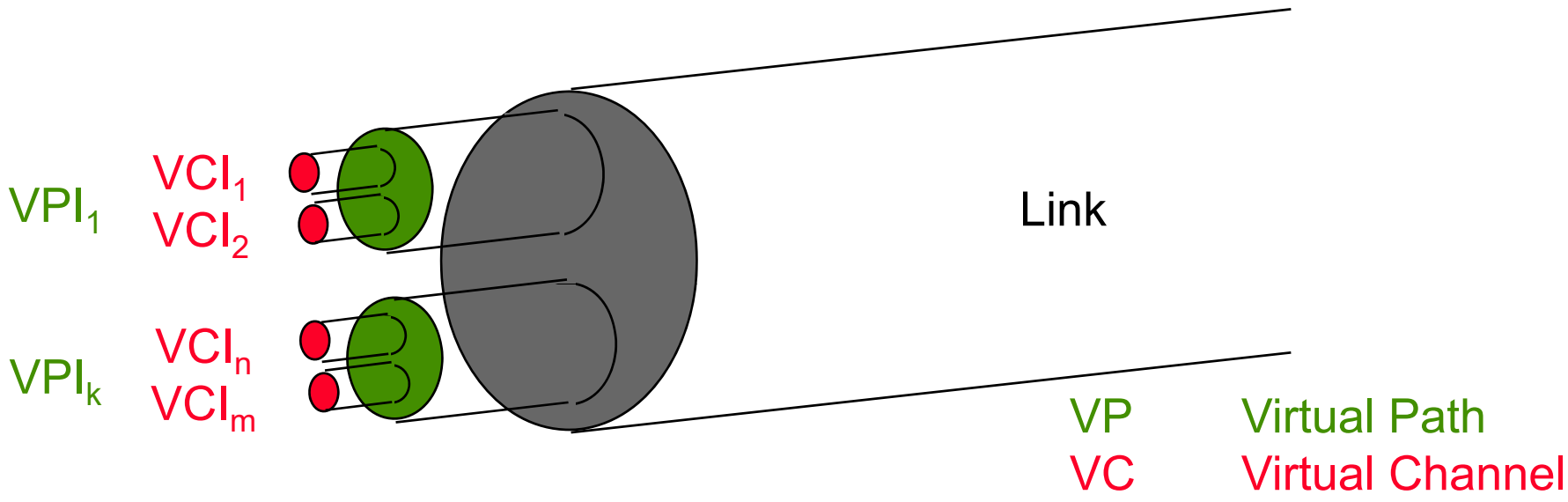

ATM Connections (2)

- Connections, links, ATM equipment, and identifiers:

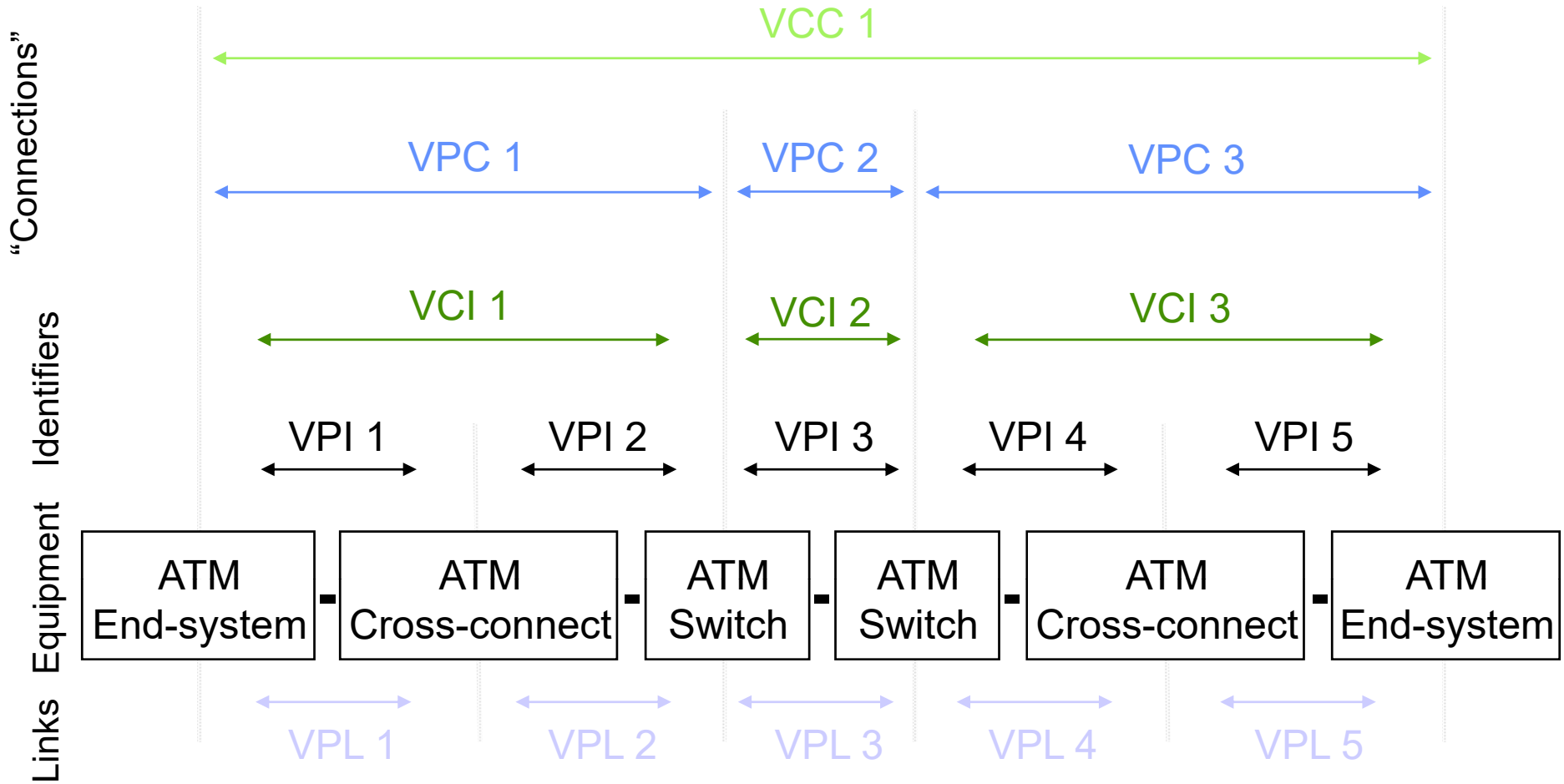

VC: Virtual Channel, VP: Virtual Path, L: Link, I: Identifier, C: Connection

ATM Connections (3)

- Hierarchical connection concept includes:
  - Virtual Connections are identified by two identifiers, which are significant only locally per link in the virtual connection.
    - Error-control is done end-to-end only, if required.
      - High quality links and a good call acceptance control.
    - Flow-control is not provided.
      - High bandwidth delay product.
  - Virtual Channel (VC) is a unidirectional channel, identified by the Virtual Channel Identifier (VCI).
    - Dynamically allocated connections.
  - Virtual Path (VP) contains a group of VCs, identified by the Virtual Path Identifier (VPI).
    - Statically allocated connections.

ATM Switching (1)

- Two types of switching may be performed.

- VP switching (ATM Cross-connect):
  - Switching between VPs,
  - No evaluation and change of VCIs,
  - Change of VPIs, and
  - Variable number of VCs per VP possible.

- VC/VP switching (ATM Switch):
  - Switching in close cooperation between VCs and VPs,
  - Evaluation of VCI and VPI in an intermediate system,
  - Change of VCI <u>and</u> VPI if necessary, and
  - Incoming VCs of one VP may be distributed between many outgoing VPs.

ATM Switching (2)

- Use of VPI in a B-ISDN network (cross-connect).

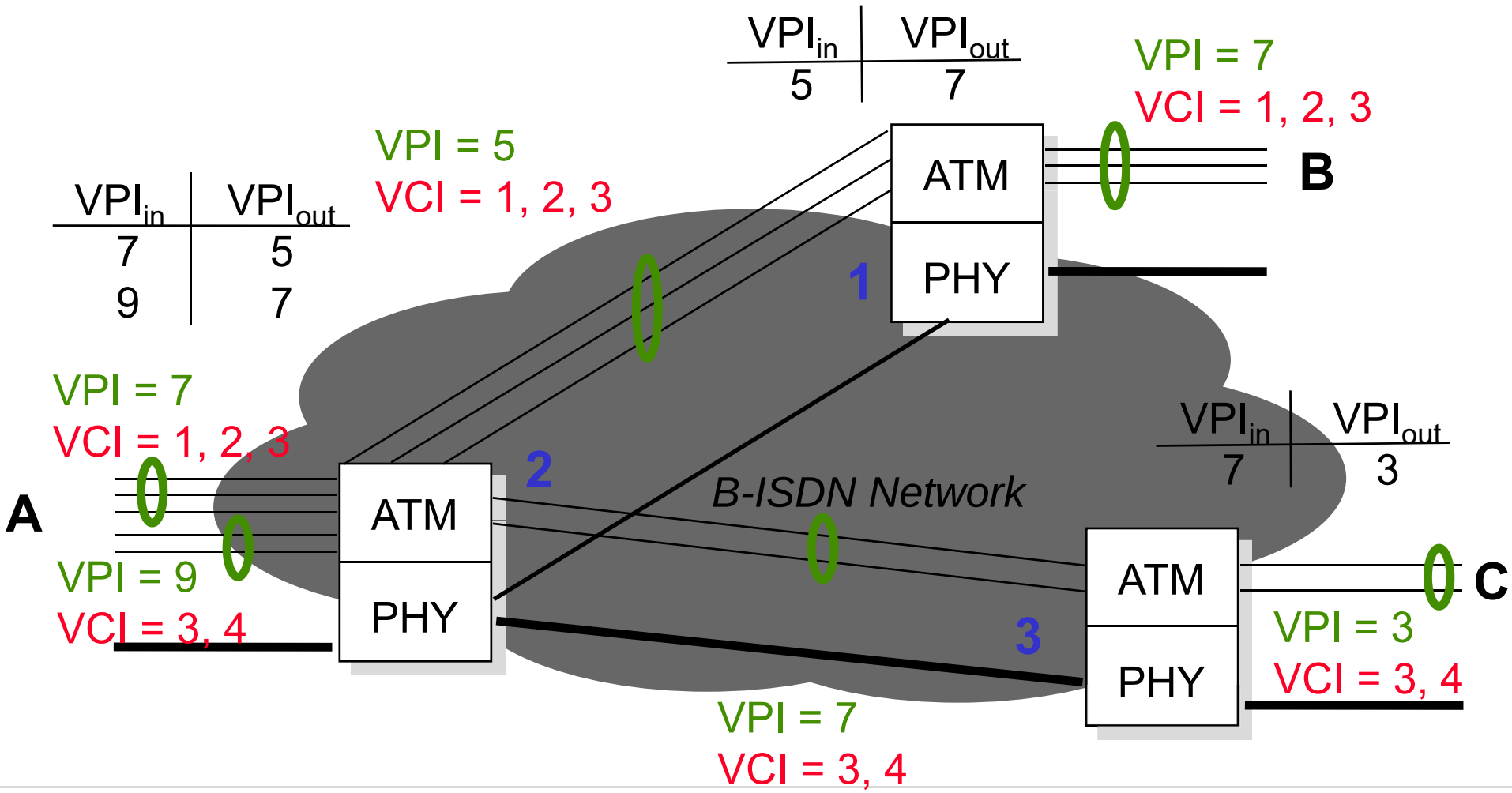

ATM Switching (3)

- Use of VPI-VCI in a B-ISDN network (ATM switch).

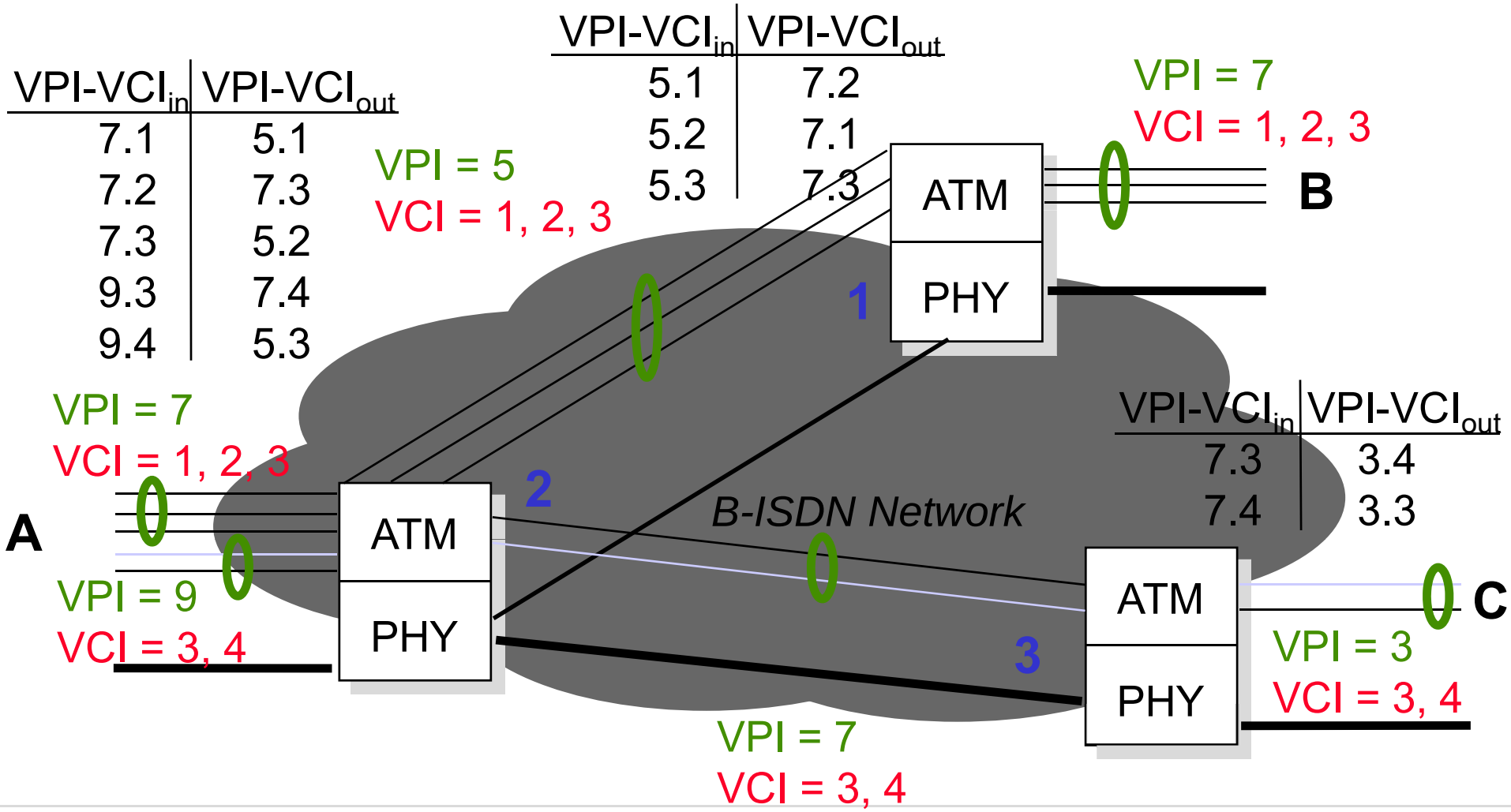

ATM Adaptation Layer (AAL)

- Services are offered using the AAL Service Classes based on the timing between source and sink, the bit rate, and the connection modus (cf. Subpart 2a).

- Each class is supported by different AAL types:
  - Class A: AAL 1
  - Class B: AAL 2
  - Class C: AAL 3/4 or AAL 5
  - Class D: AAL 3/4 or AAL 5
- ATM Layer connections are service-independent.
  - Cell-based multiplexing and transport.
- AAL connections are service-dependent.
  - Particular protocols provided.

Structure of the AAL

- AAL includes sub-layers:
  - Segmentation and Reassembly (SAR) between packets/cells.
  - Convergence sub-layer (CS) for service-dependent adaptation:
    - Common Part Convergence Sub-layer (CPCS) and
    - Service Specific Convergence Sub-layer (SSCS).
  - Layers may be empty.

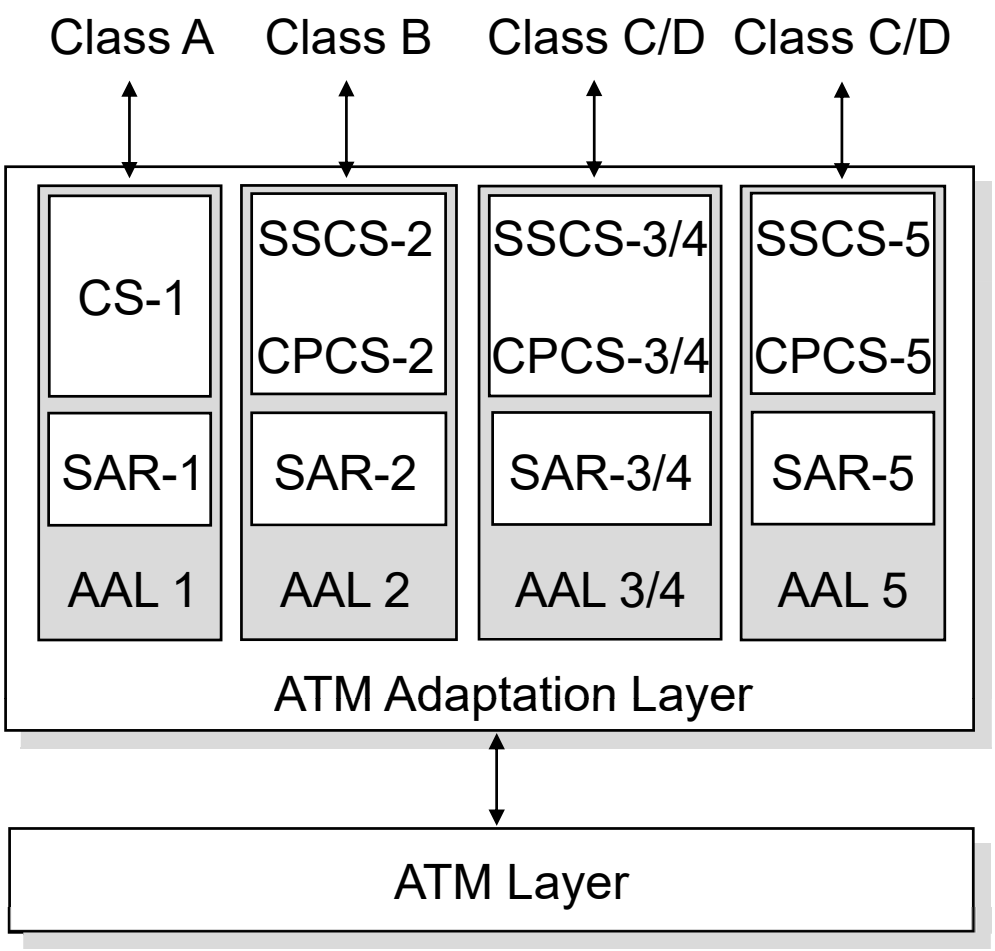

ATM Service Interfaces – AAL 3/4

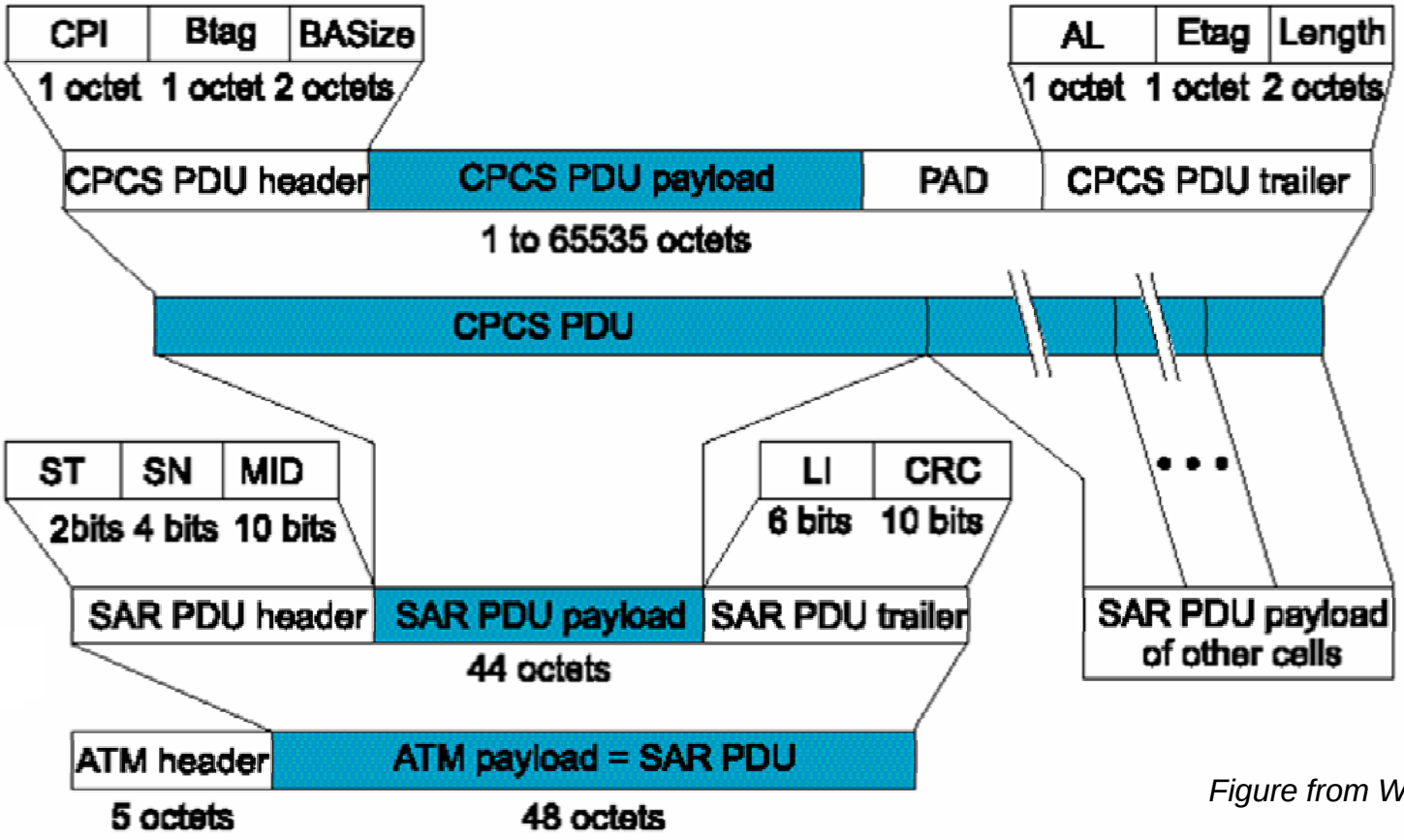

Figure from W&G.

AL: Alignment
BA: Buffer Allocation
BTag: Begin Tag
CPI: Common Part Indicator
CRC: Cyclic Redundancy Check
ETag: End Tag
LI: Length Indicator
MID: Multiplexing Identifier
PAD: Padding
SAR: Segmentation and Reassembly
SN: Sequence Number
ST: Segment Type

ATM Service Interfaces – AAL 5

- AAL 5 provides a variable bit rate (VBR) service.
  - More efficient than AAL 3/4 :
    - Less protocol overhead due to 8 Byte trailer and
    - End of AAL 5 PDU is defined in ATM cell (PTI).
  - No multiplexing in AAL.
- Trailer contains:
  - Padding (PAD) to shift the relevant content to the end.

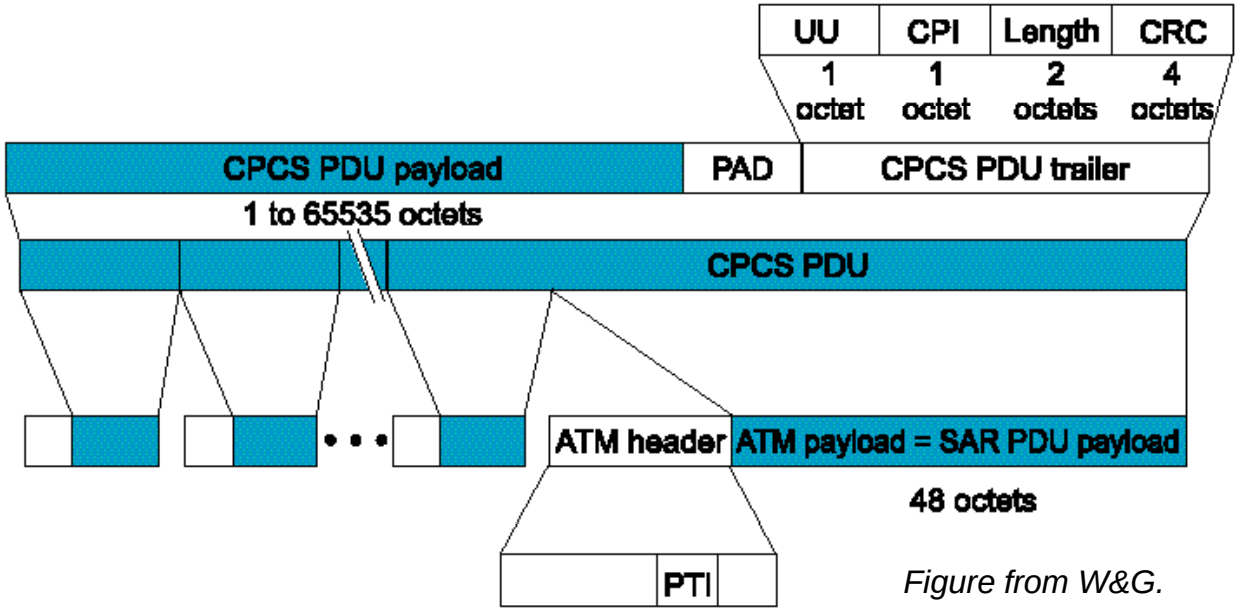

Figure from W&G.

CPI: Common Part Identifier
PAD: Padding
PTI: Payload Type Information
UU: User-to-user Information

ATM Functions per Layer – Overview

Layer	Sub-layer	Function
AAL	CS	Handles transmission errors Handles lost and mis-inserted cell conditions Handles timing between source and destination Handles cell delay variation
	SAR	Segments higher-layer information into 48 Byte fields Reassembles cell payload in higher layer information
ATM		Multiplexes cells from different ATM channels Generates cell header (first four bytes) Performs payload type discrimination Performs traffic shaping and flow control Routes and switches cells as needed Indicates cell loss priority and selects cells for discarding
PHY	TC	HEC header sequence generation and verification Cell delineation Transmission frame generation and recovery
	PM	Bit timing

© 2020 Burkhard Stiller

ATM Signaling and Interfaces

- Signaling is part of the control plane:
  - Setup of VPI/VCI per link.
  - Reservation of resources.
  - Manual configuration by administrator: PVC.
  - Automated configuration (signaling protocol): SVC.

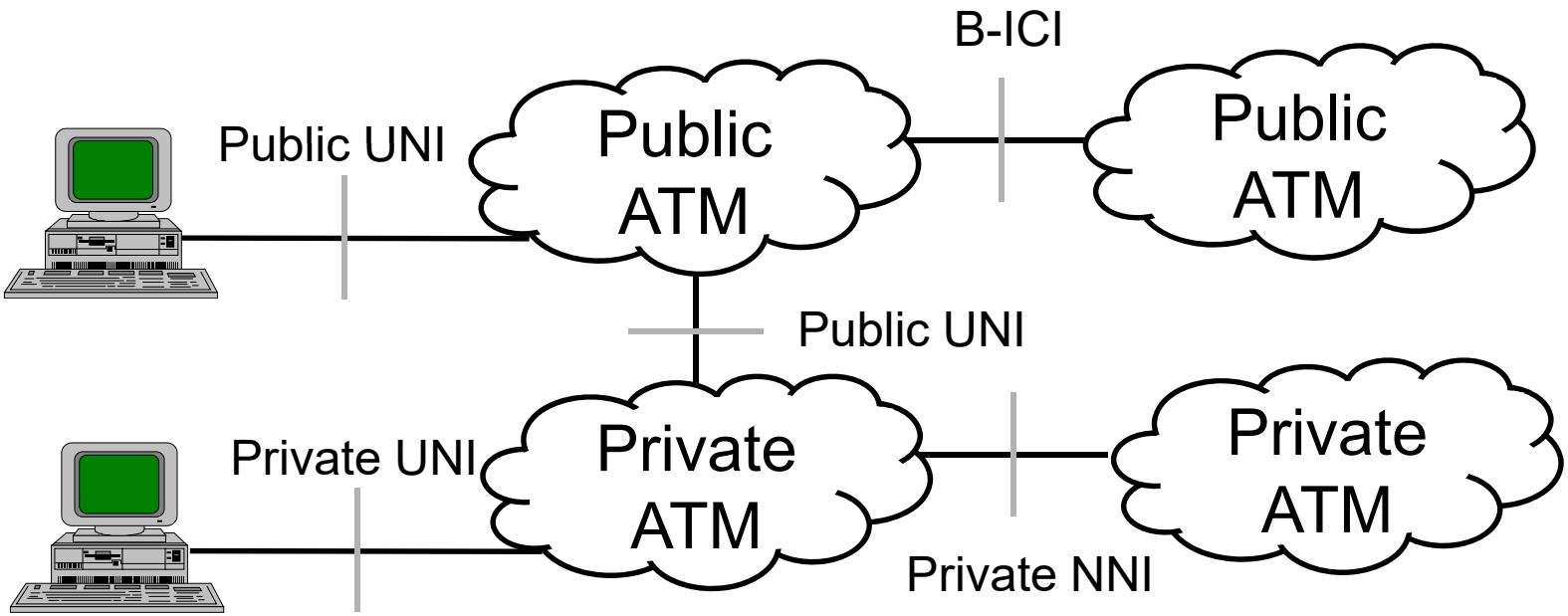

UNI: User Network Interface, NNI: Network Network Interface, B-ICI: Broadband Inter-Carrier Interface

UNI, P-NNI, and B-ICI

- User Network Interface (UNI) approaches:
  - ATM Forum UNI 3.0, 3.1, and 4.0, and ITU-T Q.2931.
  - Setup of ATM connections (1:1 and 1:n).
  - Negotiation of traffic characteristic and QoS parameter.

- Private Network Network Interface (P-NNI):
  - Protocol to setup ATM connections (1:1 and 1:n).
  - Routing based on topology and QoS (bandwidth).

- Broadband Inter-Carrier Interface (B-ICI):
  - Interface between public ATM providers.
  - Version 2.0 supports PVCs only (manual configuration).
  - Metering of traffic, traffic management (shaping), and network management (operation and management).

Access Technologies

Asymmetric Digital Subscriber Loop (ADSL)

Access Technologies (1)

- Telephone system and traditional modems:
  - Phone channels, low-speed, widely deployed.
  - ISDN advances, as a 2x64 kbit/s bearer service.
  - Deployment: 650 million customers on twisted pair.

- Hybrid cable systems and cable modems:
  - Hybrid Fiber Coax (HFC).
  - Shared bus, 27 Mbit/s downstream, 768 kbit/s upstream.
  - Permanent access, noise levels, variable performance.
  - Deployment: large regional differences. Changes and upgrades in access network areas to be performed.

Access Technologies (2)

- Wireless Local Loop (WLL):
  - Utilization of the air interface between residential customer and a backbone (WLL) provider.
  - Deployment: basically not existing.

- Digital Subscriber Loop systems (DSL):
  - Exploiting spectrum of phone copper cables.
  - Deploy modulation, equalization, and error-control technique advances.
  - Dedicated line, 30 Mbit/s downstream, 2 Mbit/s upstream.
  - Deployment: 650 M customers on twisted pair. But changes in access network hardware required.

DSL Comparison

DSL Scheme	Downstream [kbit/s]	Upstream [kbit/s]	Voice Support
IDSL	144	144	Active
UDSL	1,000	300	Splitterless
SDSL	160 – 1,168	160 – 1,168	No
HDSL	2,048	2,048	No
ADSL	1,500 – 8,000	64 – 800	Passive
VDSL	1,500 – 25,000	1,600	Passive

ADSL: Asymmetric DSL
HDSL: High bit-rate DSL
IDSL: ISDN DSL
SDSL: Symmetric DSL
UDSL: Universal DSL
VDSL: Very high bit-rate DSL

ADSL Technology – Overview (1)

- Twisted pair access to the information highway:
  - Delivering video und multimedia data.
  - Avoids the replacement of existing cabling.
  - Transformation of existing telephone network into a multi-service network by applying modulation.
  - Use of full copper frequency spectrum (app. 1.1 MHz).

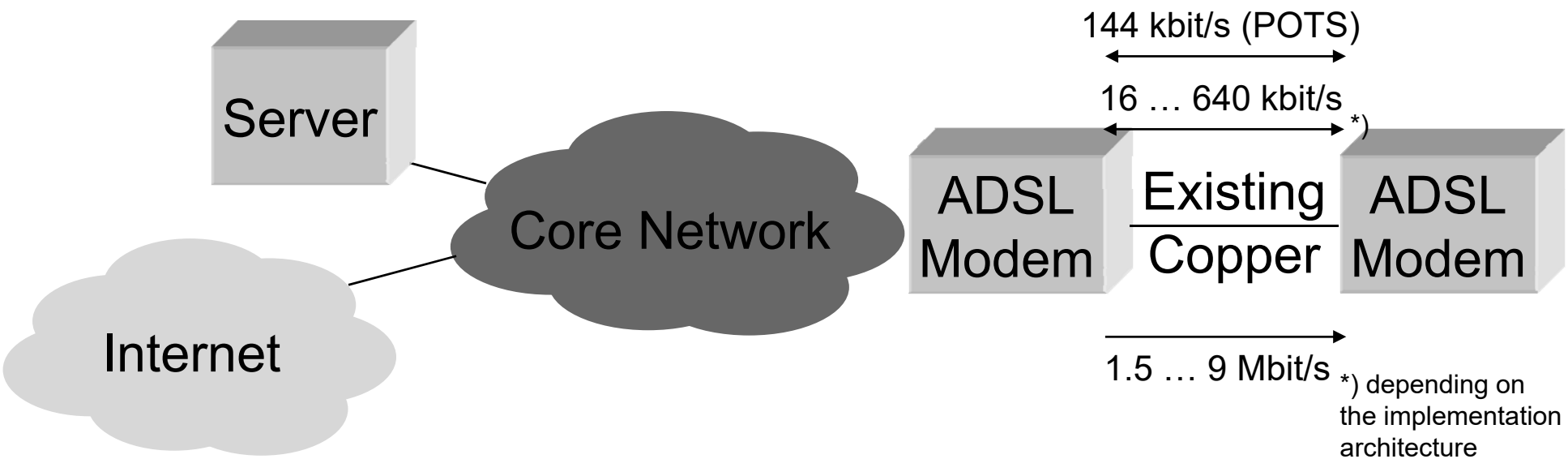

ADSL Technology – Overview (2)

- ADSL Forum Reference Model:

ATU: ADSL Terminal Unit
R: Remote
C: Central Office
SM: Service Module

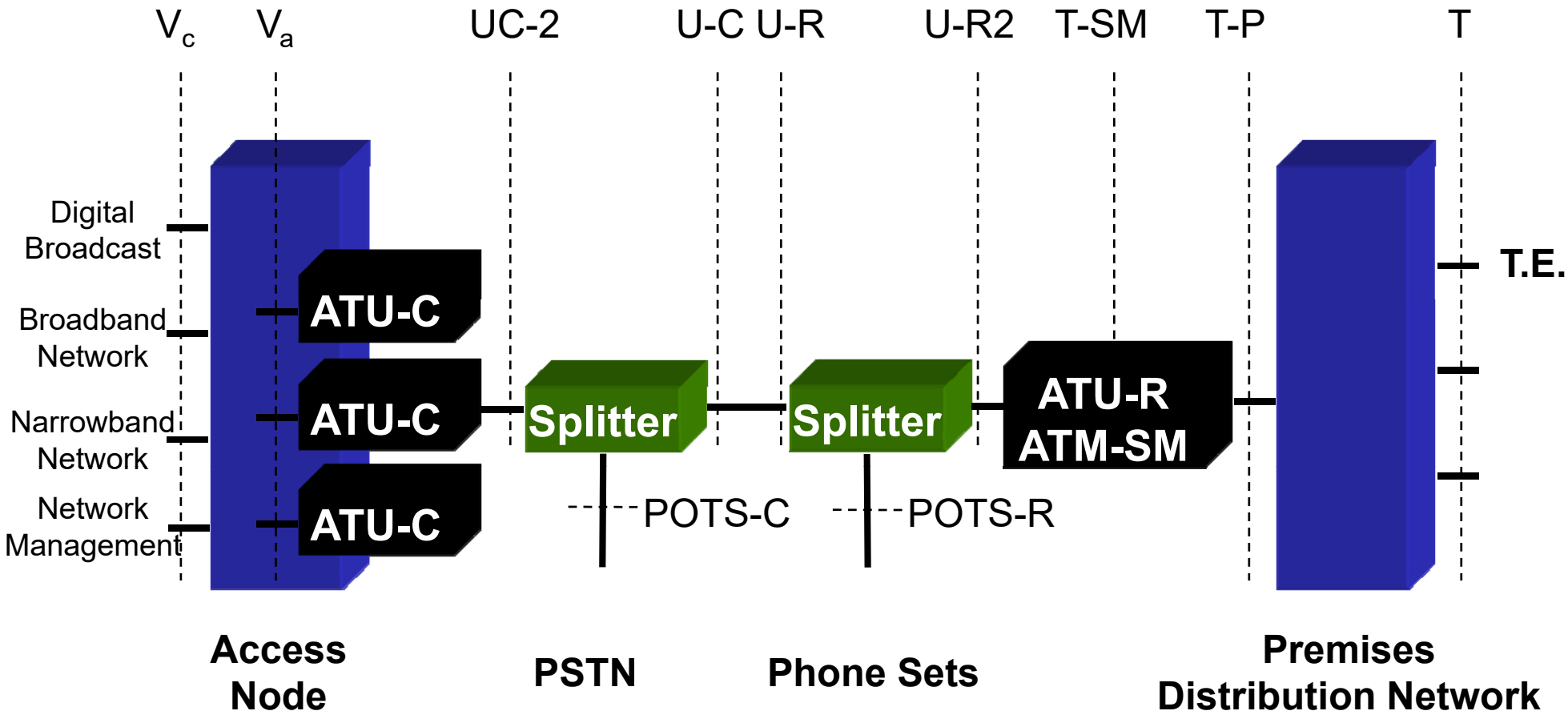

ADSL Technology – Challenges

- Attenuation
  - Frequency dependent (next slides)
- Crosstalk
  - Near-end crosstalk (NEXT) appears between TX and RX of the near-end
  - Far-end crosstalk (FEXT) appears between TX and RX of the far-end

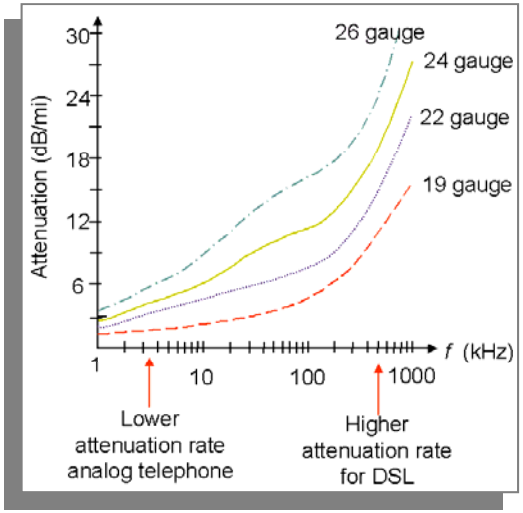

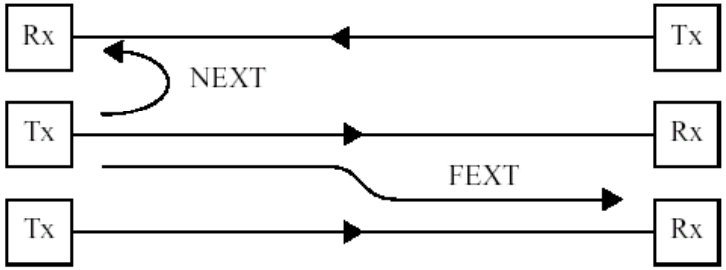

- Interference: other lines, overlapping RF-spectra
- Bridged taps, loading coils
- Weather-conditions (moisture, temperature) affect crosstalk and line impedance

ADSL Technology – Capabilities

- Data rates depend on:
  - Length of copper line,
  - Wire gauge,
  - Presence of bridged taps, and
  - Cross-coupled interference.
- 95% of today's loop plants meet the measures.
- But, requires advanced digital signal processing and advanced coding schemes to deal with varying noise figures. Recent advances applied!

Data Rate [Mbit/s]	Wire Gauge [mm]	Distance [km]
1.5 or 2	0.5 (26 AWG)	5.5
1.5 or 2	0.4 (24 AWG)	4.6
6.1	0.5 (26 AWG)	3.7
6.1	0.4 (24 AWG)	2.7

AWG: American Wire Gauge

Downstream Bearer Channels [Mbit/s]		Duplex Bearer Channels [kbit/s]	
n*1.536	1.536	C Channels	16
	3.072		64
	4.608	Optional	160
	6.144	Channels	384
n*2.048	2.048		544
	4.096		576

ADSL Technology – Modulation

- Competition on modulation techniques due to market and patents.
  - Carrierless Amplitude Phase (CAP) Modulation:
    - Multilevel, multiphase encoding.
      - Combination of amplitude and phase.
      - Real-time adjustment of bit rate.
    - Frequency range from 35 kHz up and 240 kHZ up to 1.1 MHz used as two channels (up- and down-link).
    - Applied in some standards, such as V.32/V.32bis.
  - Quadrature Amplitude Modulation (QAM):
    - Two traffic classes for bypassing a FEC.
  - Bellcore test in 1993, Committee T1E1.4 decided on DMT.

ADSL Technology – DMT Modulation

POTS: Plain Old Telephony System

- To work simultaneously with POTS on copper line.
  - Lower 4 kHz are used by POTS.
  - Discrete Multi Tone (DMT): 256 separate sub-frequencies from 4 kHz, each 64 kbit/s.

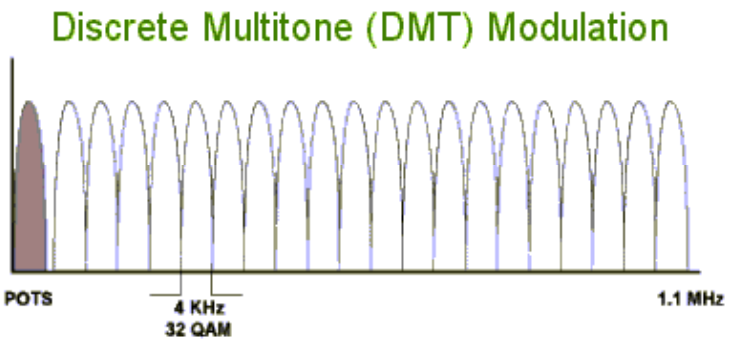

Data rate = No of channels * no of bits/channel * modulation rate
Theoretical max upstream: 25*25*4k = 1.5 Mbit/s
Theoretical max downstream: 249*15*4k = 14.9 Mbit/s

- Amplification varies dependent on frequency.

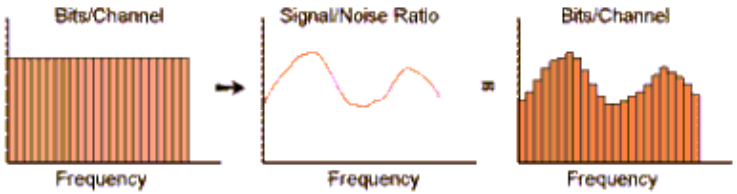

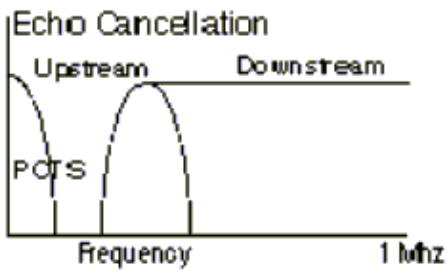

ADSL Standards

ADSL Standards

Semiconductors & devices: www.adsl.com

International/national standardization: ITU, ETSI, ANSI ...

Standards Body	Working Group	Standard	Purpose
ADSL Forum	Many, including UAWG SNAG	TR-00x	Industry Advisory Papers
ANSI T1	T1E1.4	T1.413, Issue 2	Basic ADSL Standard
ETSI	TM6		Close interworking with ANSI
ITU-T	Study Group 15	G.992.1	International Standards
		G.992.2	
		G.994.1	
		G.995.1	
		G.996.1	
		G.997.1	

G.full

G.lite

UAWG: Universal ADSL Working Group
(makes ADSL more commercially adaptable)
SNAG: Service network architecture group

Hierarchy of Standards

International level — Examples: ITU: International Telecommunications Union - yields recommendations that may be adapted by companies

Regional/national level — Examples: ANSI (American Standards Institute) /ETSI (European Technical Standards Institute)

Multi-corporate level — Examples: ADSL forum/ATM forum

Corporate level — Open or proprietary standard created by a company

See also:
http://www.ktl.com/testing/telecoms/xdsl-standards.htm

ADSL Network Architectures (1)

- ADSL-ATM network architecture, point-to-point:

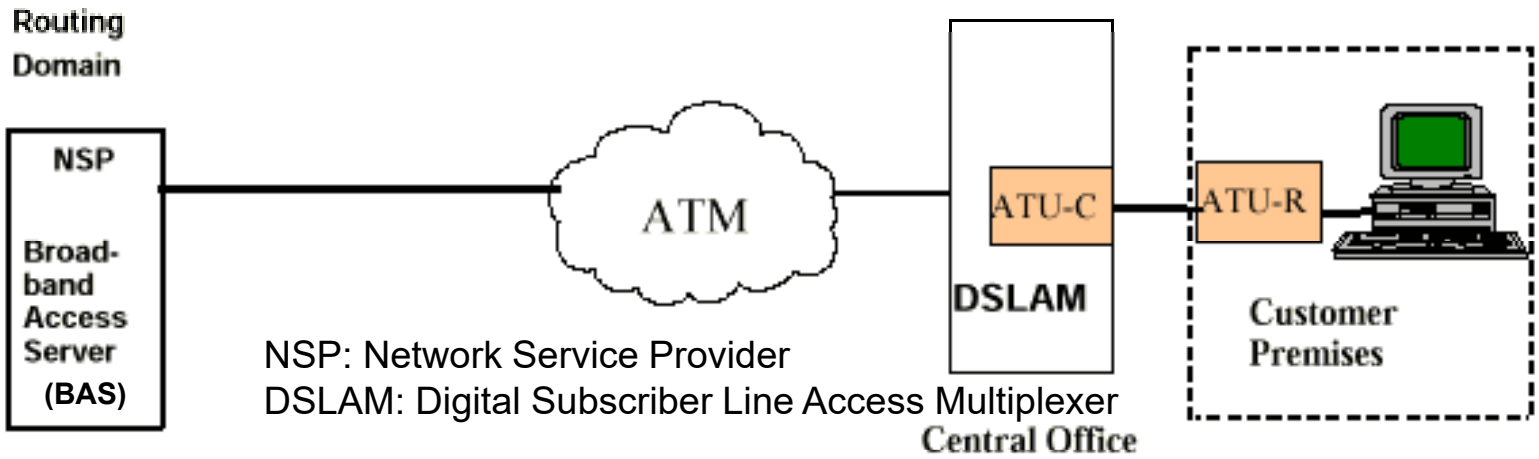

NSP: Network Service Provider
DSLAM: Digital Subscriber Line Access Multiplexer

ADSL Network Architectures (2)

- ADSL-ATM including L2TP:

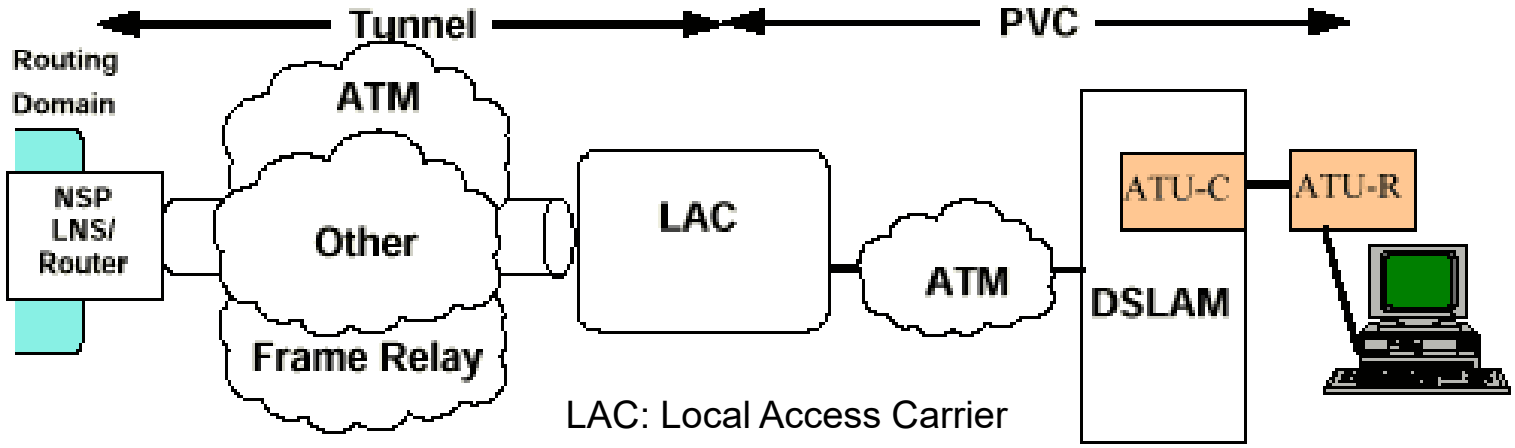

ADSL Network Architectures (3)

- ADSL-ATM including IP:

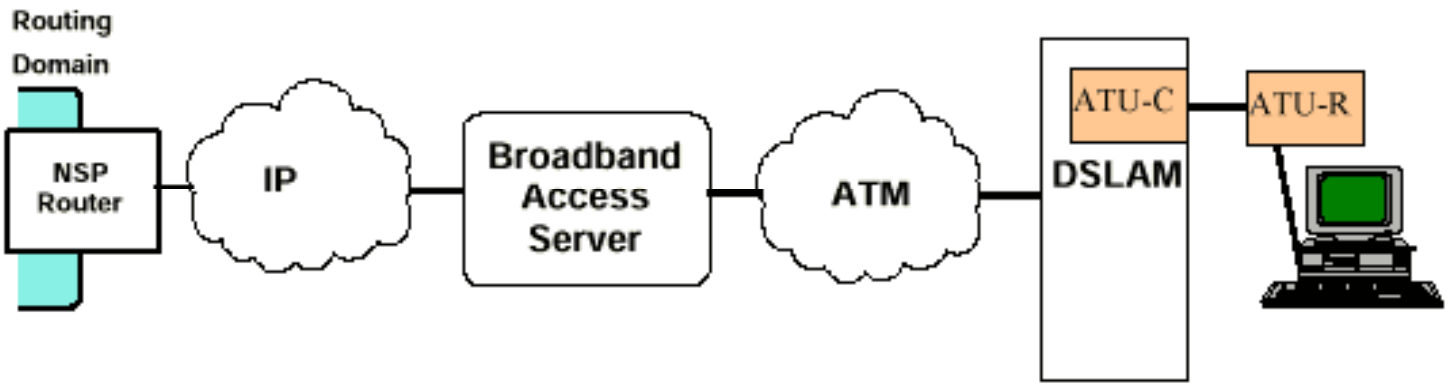

References (1)

- M. Sexton, A. Reid: *Broadband Networking ATM, SDH, and SONET;* Artech House, Boston, Massachusetts, U.S.A., 1997, ISBN 0–89006–578–0.
- C. G. Omidyar, A. Aldridge: *Introduction into SDH/SONET*; IEEE Communications Magazine, Vol. 35, No. 9, September 1993, pp 30 – 33.
- *The Sonet Home Page;* URL: http://www.sonet.com, 2001.
- CIENA Inc.: *Fundamentals of DWDM*; URL: http://www.ciena.com, 2001
- A. G. Fraser: *Early Experiments with Asynchronous Time Division Networks*; IEEE Network Magazine, Vol. 7, No. 1, January 1993, pp 12 – 27.
- R. J. Vetter: *ATM Concepts, Architectures, and Protocols;* Communications of the ACM, Vol. 38, No. 2, February 1995, pp 30 – 38.
- B. G. Kim, P. Wang: *ATM Network: Goals and Challenges;* Communications of the ACM, Vol. 38, No. 2, February 1995, pp 39 – 44.
- B. Stiller: *A Survey of UNI Signaling Systems and Protocols for ATM Networks;* ACM Communication Review, Vol. 25, No. 2, April 1995, pp 21 – 33.
- G. Huston: *Interconnection, Peering, and Settlements;* The Internet Protocol Journal, Vol. 2, No. 1, March 1999, pp 2 – 16.

References (2)

- Z. Wang: *Toward Scalable Bandwidth Allocation on the Internet;* OnTheInternet, May/June 1998, pp 24 – 32.
- P. Newman, G. Minshall, T. Lyon, L. Huston: *IP Switching and Gigabit Routers;* IEEE Communications Magazine, Vol. 35, No. 1, January 1997, pp 64 – 69.
- D. Ginsburg: *Implementing ADSL;* Addison-Wesley, Reading, Massachusetts, U.S.A., July, 1999, ISBN 0–201–65760–0.
- ITU GSR Discussion Paper: *Interconnection Charging Models in a National Broadband Network Environment;* July 2013
- FTI Consult: *Commercial Considerations in IP Interconnection Agreements;* March 2014
- P. Baake, S. Sudaric: *Interconnection and Prioritization;* 28th European Regional Conference of the International Telecommunications Society (ITS), Passau, Germany, July/August 2017
- EU Policy: *Broadband Technologies;* https://ec.europa.eu/digital-single-market/en/broadband-technologies, January 2019